THE MIDLAND WIND AND WATER MILLS GROUP

(affiliated to the Society for the Protection of Ancient Buildings)

This Journal is published by the Midland Wind and Water Mills Group, which is concerned with the study of the history and technology of mills, and, in principle, with their preservation and restoration. Its area is the region loosely defined as the Midlands, especially the central counties of Staffordshire, Worcestershire and Warwickshire.

The Group, which functions as an autonomous society, holds monthly indoor meetings, with talks and discussions, during the winter, and arranges several tours to mills during the spring and summer. Members periodically receive a Newsletter and the Journal, and can purchase other publications at preferential prices.

For further particulars, please contact: Gordon Tucker, 26, Twatling Road, Barnt Green, Birmingham B45 8HT.

Wind and Water Mills

The Occasional Journal of the Midland Wind and Water Mills Group

affiliated to the Society for the Protection of Ancient Buildings

Number 4

Summer 1983

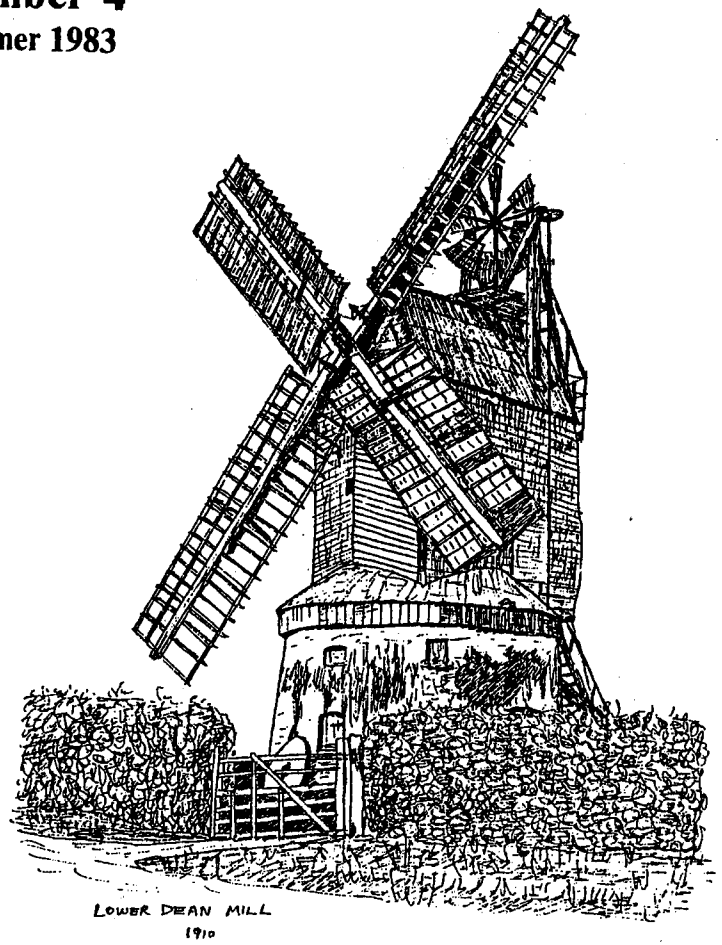

Wind and Water Mills, although the journal of the Midland Wind and Water Mills Group and therefore naturally concerned with the mills of the Midlands, is not intended to be narrowly parochial. Interesting and important articles relating to mill matters in other parts of Britain and the world will be included whenever available. In general, articles by members will have priority, but submissions by others will be willingly considered.

D.G.T.
D.T.N.B.

Cover illustration:
LOWER DEAN MILL, see p.22, Bedfordshire Windmills.

Wind and Water Mills

The Occasional Journal of the Midland Wind and Water Mills Group

Number 4
Summer 1983

CONTENTS PAGE

NINETEENTH-CENTURY MILLERS AT TURN MILL (ELMBRIDGE) AND ELMBRIDGE MILL, WORCESTERSHIRE
by A.F. BROWN 2

WATERMILLS AND WATER-POWERED WORKS ON THE RIVER STOUR, WORCESTERSHIRE AND STAFFORDSHIRE
PART 1. STOURPORT AND KIDDERMINSTER
by H.W. GWILLIAM AND GORDON TUCKER 5

BEDFORDSHIRE WINDMILLS
by PETER DOLMAN 21

THE HORIZONTAL MILLS OF HAZARA
by JOHN K.G. BOUCHER 31

THE DEVELOPMENT OF THE WATER TURBINE
by J.A. CRABTREE 45

JESSE SHIRLEY'S ETRUSCAN BONE AND FLINT MILL
ETRURIA, STOKE ON TRENT
by BARRY JOB AND TONY GREEN 61

© The copyright of these articles rests with their authors unless otherwise stated.

ISSN 0260-504X

HON. EDITORS
D.G. Tucker 26, Twatling Road, Barnt Green, Birmingham B45 8HT
D.T.N. Booth 18, Hawne Close, Halesowen, West Midlands B63 3QQ

NINETEENTH-CENTURY MILLERS AT TURN MILL (ELMBRIDGE) AND ELMBRIDGE MILL, WORCESTERSHIRE

by A.F. BROWN

In the study of the history of mills, there are many sources of information, and among these are the parish registers of baptisms, weddings and burials. From these can be found many details of the lives and occupations of people who at some time worked as millers. I have made a study of the registers for Elmbridge, Worcestershire, and can therefore add a little to the information given in the article by Gordon Tucker in Wind and Water Mills No.3 (1982), which dealt with the watermills of the Salwarpe basin. In Elmbridge there were two watermills: Turn Mill (or Badge Court Mill as it was occasionally called) and Elmbridge Mill-Nos. 29 and 30 in Tucker's article. Using the parish registers, the information he gives about the millers can be considerably augmented, as shown in the Table.

The Elmbridge registers are best studied from a transcript prepared by the Rev.J.H.L.Booker, who was Vicar of Elmbridge from 1888 onwards. The transcript is a large book like a ledger, 9 x 13½ x 2½ inches, weighing 8 lbs. It starts with an 'Index Nominum' giving an alphabetical index of the names of the clergy, officials and 'gentlemen', etc.; then comes an 'Index Locorum' which includes Elmbridge Mill. There are then about 190 pages forming the transcript proper for the period 1570 to 1892, and then an index to baptisms (2168 entries), burials (1275 entries), and weddings (747 entries). Finally, there are nine pages of 'Stray Notes'.

From the present point of view, it is a pity that, as with most parish registers, occupations are shown only from 1812 for baptisms, where the occupation of the father is shown, and from around 1840 for weddings, where the occupations of the bride and groom and their fathers are given. There are many ambiguities; the fact that a bridegroom resides at a mill does not infer he is a miller, for he is very likely to be a worker lodging at the mill; the fact that the father of the bride or groom is a miller does not mean he is necessarily a miller in the parish concerned, for he may reside elsewhere, the place of residence not being stated. This accounts for a question mark entered in the Table against William Maund. But I am reasonably confident about the entries in the Table, which also include the names given by Tucker for the 19th century; these are shown in brackets; H.E.S.Simmons was one of his principal sources of data.

Editorial Note

From our experience in using parish registers in other areas, we agree that they are a most valuable source of information, especially in strongly-Anglican parishes; however, Mr. Brown was fortunate (or perhaps wise) in choosing to study a parish where the registers had been carefully transcribed and indexed. More systematic information (but not necessarily more reliable or greater in quantity) may be obtained from the manuscript Census Enumerations of 1841, 1851, 1861, 1871 and 1881 which record the address, occupation, age and family relationships of all people in the parish on the day of the ten-yearly census. Until comparatively recently these were accessible only in London, but now microfilm copies of the enumerations for each parish in a county are usually available in the appropriate County Record Office. This is certainly true of Worcestershire. As they are not indexed, however, their use is very laborious.

We should point out that until fairly late in the 19th century, Elmbridge was not a parish, but only a chapelry in the parish of Dodderhill.

	DATE	NAME OF MILLER	ENTRY IN REGISTER
TURN MILL, ELMBRIDGE	30 Jan.1816	Robert Drew	Burial of Sarah, wife of Robert Drew of Turn Mill
	18 Mar.1829	John Fox	Burial of John Fox of Turn Mill, aged 63
	11 Feb.1838	John Fox (jnr.)	Baptism of Samuel, son of John Fox, Turn Mill, miller
	(1842	William Fox	From Tithe Award -- Landowner, Earl of Shrewsbury)
	(29 May 1844	William Fox	Letter from Turtons, millwrights of Kidderminster)
	4 Feb.1863	William Maund ?	Wedding of Ann Maund of Turn Mill, daughter of William Maund, miller
	8 May 1873	William Taylor	Baptism of George, son of William Taylor, Turn Mill, miller
ELMBRIDGE MILL	9 Jan.1816	Joseph Homan	Baptism of Joseph, son of Joseph Homan, miller of Elmbridge
	(1820	J.Homan	Given by H.E.S.Simmons)
	2 Dec.1835	John Harris	Baptism of Elizabeth, daughter of John Harris, Elmbridge Mill, miller
	1 Oct.1837	John Harris	Baptism of 2 daughters of John Harris, miller of Elmbridge
	(c.1854-c.1864	J.Harris	Given by H.E.S.Simmons)
	26 Apr.1863	Thomas Bennet	Baptism of Ellen, daughter of Thomas Bennet, Elmbridge Mill, miller
	20 May 1866	Charles Jones	Baptism of Harriet, daughter of Charles Jones, Elmbridge Mill, miller
	5 June 1870	Charles Jones	Baptism of Agnes, daughter of Charles Jones, Elmbridge Mill, miller
	(c.1884-c.1900	W.H.Langley	Given by H.E.S.Simmons)
	15 May 1890	William Langley	Marriage of William Langley, aged 29, Elmbridge, miller
	14 June 1891	William Langley	Baptism of Amy Mary, daughter of William Langley, miller
	(c.1904-c.1916	A.Langley	Given by H.E.S.Simmons)

The statement in the original article that the site of Elmbridge Mill may not be ancient is probably incorrect, as the 'Victoria County History' states that the manorial mill of Elmbridge was first mentioned in 1376.

ELMBRIDGE MILL

WATERMILLS AND WATER-POWERED WORKS ON THE RIVER STOUR, WORCESTERSHIRE AND STAFFORDSHIRE

PART 1. STOURPORT AND KIDDERMINSTER

by H.W. GWILLIAM AND GORDON TUCKER

Unlike the watermills of the Salwarpe basin, which have recently been described in this journal[1] and were essentially those of a rural non-industrial community, the water-powered works of the Stour basin were essentially industrial; corn mills were in a minority, and from quite early times most mills were concerned with either the textile or the iron industries. Occasionally there was a paper mill. Surveys of the mills on the two large southern tributaries of the Stour - the Belne Brook and the Wannerton Brook in North Worcestershire - have already been published in this journal[2,3] and between them established 44 water-powered sites. The present series, which will be published in several parts by varying authors, aims at continuing the process of survey in the same manner. The intention is not to present a comprehensive and coherent survey of the industrial development of the area, but to establish the location, nature and history of each individual water-powered site. This has not been done before as far as we know, but is much needed as a basis for a serious study of the nature of industrial development.

It is surprising to find how often watermills or their sites have changed their use. Corn mills are converted to textile spinning or weaving mills, or vice-versa. Corn mills are built on disused iron forge sites. Early fulling mill sites were used for various new purposes.

This part of the series of articles covers the Stour from its confluence with the R.Severn up to the northern boundary of Kidderminster parish (all boundaries used are the 'historical' boundaries of the 19th century, not the recently revised 'administrative' boundaries). The fall in the river from the north to the south of this portion is about 48ft. (say 15m), and we list 9 water-powered mills or works. This seems a very full use of the available head, and explains why most of the waterwheels were of the undershot type. Fortunately there was a good, full and reliable flow of water, so powerful mills could nevertheless be obtained.

Medieval mills

There were curiously few mills on this part of the Stour in Domesday times; the Survey of 1086 shows three in Kidderminster but no others. In the 12th and 13th centuries there were fulling mills at Mitton (now Stourport) and Kidderminster, and also a reference to 'the great mill at Kidderminster' which was probably on the site of the Town Mills (our No. 9). The 'great mill' was burnt down in the 14th century. In 1359-60 and again in 1496 there are references to a watermill in Over (i.e. Upper) Mitton.[4]

Later, in the 17th century, Robert Wilmot and his family had fulling mills on the R.Stour at both Lower and Upper Mitton.[5]

Parishes

In this kind of work it is always useful to know the parishes involved.

Originally the ecclesiastical parish of Kidderminster covered all land in Worcestershire in the angle between the rivers Severn and Stour except for Over (Upper) Mitton which was part of the parish of Hartlebury.[6] The latter parish covered all the land bordering the Stour to the east.

By the 19th century, the parishes of Lower Mitton and Upper Mitton had been

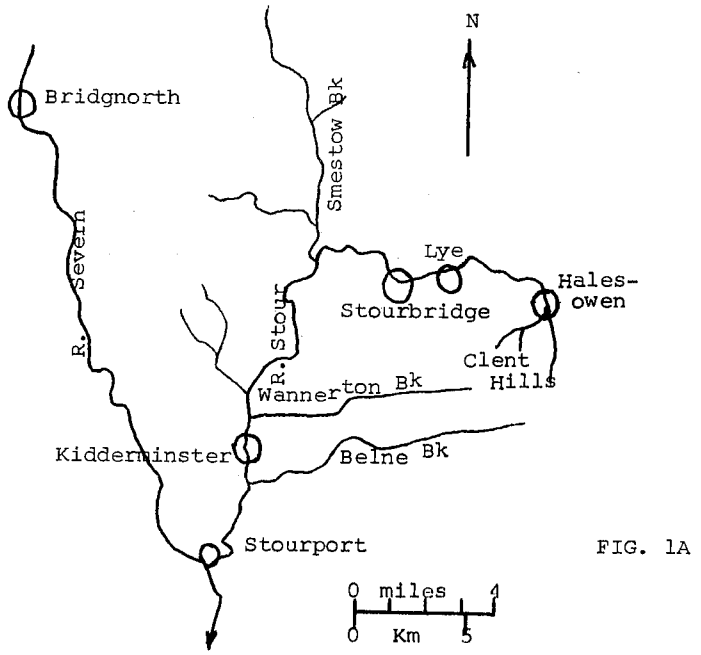

FIG. 1A

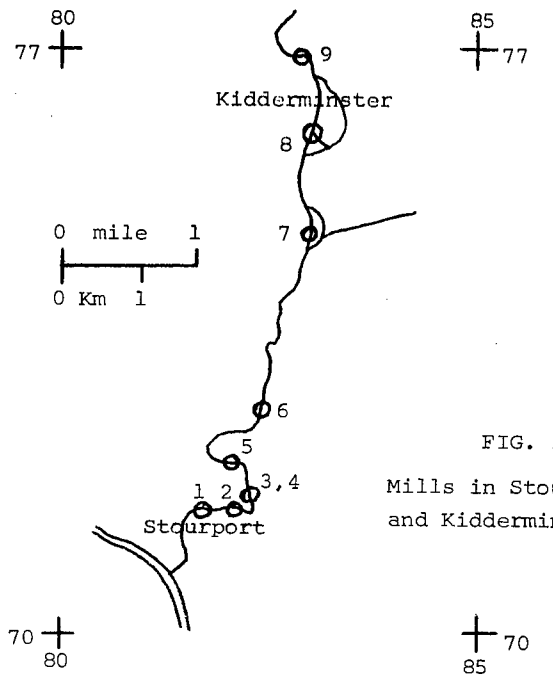

FIG. 1B

Mills in Stourport and Kidderminster

created, and Kidderminster extended to the east of the Stour in the north. The R.Stour itself was a boundary between parishes in the south, so that our first six mill sites lay immediately adjacent to a parish boundary, on one side or the other. The resulting parish attachments of the six mill sites now in Stourport (which was created a parish in 1894) were:-

Nos. 1 and 6 in Hartlebury
Nos. 2,3 and 4 in Lower Mitton
No. 5 in Upper Mitton.

The remaining three mill sites (Nos. 7-9) were in Kidderminster[7] the first of these in the division called Kidderminster Foreign, and the rest in Kidderminster Borough.

General sources of reference

We have used the H.E.S.Simmons papers in the Science Museum Library, London; Isaac Taylor's maps of Worcestershire dated 1772 and 1800; Greenwood's map of Worcestershire dated 1822; and the whole range of Ordnance Survey maps. Other sources used are referenced throughout the paper.

The area studied was, in the post-medieval period, a great centre of the iron and textile industries. The former declined in relation to the general expansion of industry in the later 18th and 19th centuries, while the textile industry expanded greatly, mainly in the form of carpet manufacture. A general account of this process of industrial change can be found in the Victoria County History, and also in the book 'Kidderminster Since 1800' by K.Tomkinson and G.Hall, Kidderminster, 1975.

Watermills on the R.Stour in Stourport

While there are many uncertainties in the history and physical description of the water-powered mills and works on the Stour, yet in the three old parishes of Hartlebury and Lower and Upper Mitton, or in the modern town of Stourport, there seem to be few difficulties in determining which were water-powered sites, and only one gives real uncertainty. We shall see later that in Kidderminster there are many such difficulties. The water-powered mills on the Stour in Stourport were as follows:-

1. Hammersmith Forge (originally called Mitton Forge).
2. Jenny Hole Forge.
3. Mitton Worsted Mill.
4. Mitton Corn Mill.
5. Mitton Wire Mill.
6. Wilden Forge and Slitting Mill.

These are discussed in more detail in the Gazetteer which follows.

In addition there is the possibility of an early mill site in the parish of Lower Mitton, later overlain by the Bond Worth Carpet Works, at grid reference SO 814711. This is the lowest site on the Stour to which we refer. No mill is shown here on the early maps, nor mentioned in the Simmons notes or by Mrs. Berkeley.[8] Nevertheless there is some evidence. When the earliest part of the carpet works was built in 1850 on the west bank of the Stour, the remains of a mill were said to have been found. In 1960 an old man was interviewed; he had worked at the carpet works as a boy and was certain that there had been a waterwheel in a pit there, for he and other boys had had rides on it, although he could not remember it being used to drive anything. The 'Survey of Lower Mitton' by John Broadfield, 1835, shows a small notch or stub in the west bank of the river perhaps 100ft. below a building which might have been a mill; this feature, which was still present on the 25-inch O.S. map of 1909, could have been the outlet from the mill stream, the rest of which was presumably in a culvert.

Watermills on the R.Stour in Kidderminster

During the 19th century, so many mills were built in Kidderminster that it is difficult at first to determine just which used water power. There were several corn mills which were entirely steam-powered, as well as numerous woollen and carpet mills. We believe there were only three water-powered mills in the parish:-

7. Falling Sands Ironworks.
8. Caldwall Mill.
9. Town Mill(s).

and these are discussed more fully in the Gazetteer below; but Simmons includes in his notes on Watermills in Worcestershire also:-

Waterside Mill (SO 831764),
Puxton Mill (SO 825770? -- long since disappeared),
Townshend Mill (SO 825773),
Clensmore Mill (SO 828775) and
New Mill.

The first was a carpet works, and although situated beside the R.Stour, does not appear to have had any connection with it. The second was a 'twine mill' in 1884, and the next two corn mills for a considerable part of the 19th century, before being converted to the carpet trade. We are fairly certain that the first three were never water-powered, and quite certain that Clensmore Mill, which stands on the canal bank remote from the R.Stour, was always entirely steam-powered. New Mill is discussed in the Gazetteer under Caldwall Mill.

There is some oral evidence of water power in what is another very doubtful case, the Stourvale Iron Works (SO 830777). This lies between the canal and a watercourse, which is evidently artificial as it is straight, and at one time carried the water of the Wannerton Brook southwards to a new confluence with the R.Stour below the works. On Greenwood's map of 1822 the Wannerton Brook flowed due west to join the Stour, and what may therefore be the old course is still shown blue on the modern 1:25,000 O.S. map. The diversion had already been made before the works were established in 1867; it was shown on Matthew's map of 1835. Nevertheless the idea of water power at the works is supported by an interview which one of the authors (HWG) had in 1970 with Mr. Jack Harris, who remembered that in his young days water power was used here to roll steel bar into sheets. However, it really does seem that this was impossible; the 6-inch O.S. map of 1888 gives spot altitudes of 109ft. on the watercourse above the works, and 107ft. on the R.Stour just below where the watercourse joins it. It is therefore clear that there was insufficient head to drive a waterwheel. Moreover, there was no way in which the level above the works could have been raised, for the Wannerton Brook had to pass under the canal, which was marked with an altitude of 113.6ft. The only possible way in which water-power could have been obtained was by the use of canal water; the head of about 5ft. would have been sufficient for an undershot wheel, but it is unlikely that the canal would have had sufficient surplus water.

GAZETTEER OF WATER-POWERED MILL SITES

1,2. Mitton Forges

1. Hammersmith Forge SO 816715
2. Jenny Hole Forge SO 822715

Two forges are shown at Mitton in Fuller's List of 1717,[9] with an annual output of about 350 tons; also two forges are marked at Mitton on Taylor's map of 1772, presumably these two. Lower Mitton and Jennyhole Forges are named separately for the first time in the List of 1750.[10]

A forge at Mitton was mentioned before 1717.[11] This was probably at the first site where, as shown in the map (Fig. 2), the watercourses of the R.Stour were suitable for the use of water-power. The site where the remains of Jenny Hole Forge can now be traced does not appear in itself to be a suitable place for obtaining water power, but this could have been obtained from a dam a little higher up the river, where the Mitton textile/corn mill was later built.

Little is known of the lower or 'Hammersmith' forge,[12] yet evidence of water-courses and of slag and charcoal in abundance points to a well-established iron-works here. The charcoal forge occupied an island site near the bridge over the Stour on the Hartlebury road, facing the junction with the Worcester road. Parts of the old forge remain on the island, moated by the Stour. There are at least three sluices, and much woodwork built into the river bank downstream of the works bridge, and the building facing the watercourse at this point has a

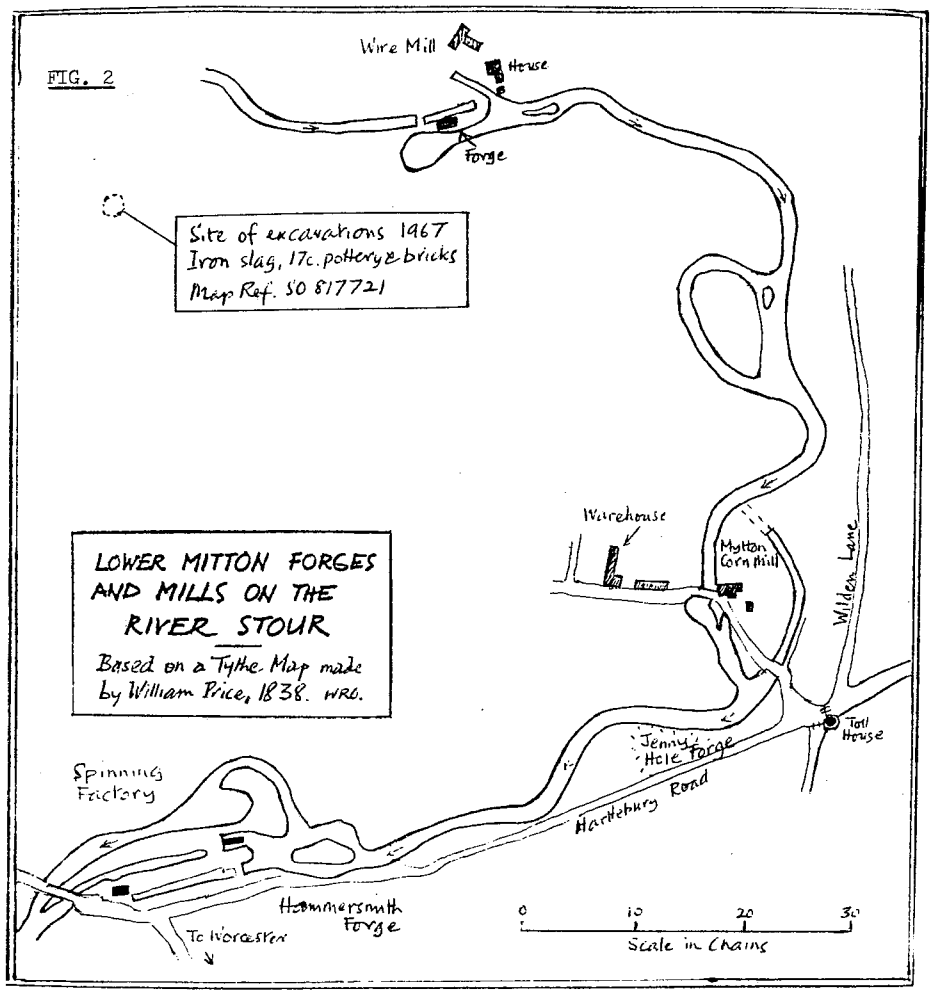

conspicuous blocked-up underground channel. Near the road bridge the banks of the river are lined with slag blocks. A considerable part of the 17th and 18th century brick walls still stands amongst the recent buildings of Messrs. Alldays.

The forge had probably ceased work before 1800. In the Palfrey papers[13]a Mr. Perrett states that Lower Mitton Forge had been in the possession of the Yarranton family since the mid 17th century.

Jenny Hole lies just off the Hartlebury road, at the turning to Mitton Mill. In the gardens of the cottages, and alongside the Stour is the site of Jenny Hole Forge. It probably began production in the late 17th century, and by 1750 it was producing 450 tons of bar iron a year. In 1791 it belonged to the Knight family,[14] but by 1821 it was disused. The site is black with charcoal and cinder, and there are steps down to the river made of huge slag blocks, part of a wharf arrangement. Slag boulders are in the river including a huge one that can be seen at low water, which was used as a marker in the beating of the bounds of the parish. There are more slag blocks at the bridge at the corner of Mill Lane, and the bridge has the original 18th century arch visible.

3,4. Mitton Mills

Mitton Worsted Mill SO 822716
Mitton Corn Mill do.

It seems that there were two mills here in the early 19th century, probably both built after Jenny Hole Forge had been abandoned, and they may have used the weir formerly used by the forge. One mill was a spinning mill for worsted and woollen yarns, and had two waterwheels according to an advertisement for sale in 1823.[15] In 1835, Robert Shirley was a Worsted Spinner at Mitton Mills.[16] At the same time, Messrs. Blundell and Cattell were Corn Millers at Jennyhole.[17] The use of a different place-name for the corn milling must indicate a separate mill, although, as seen from Fig. 3, it must have been quite close. (Mitton was the parish name, Jennyhole the place in the parish.)

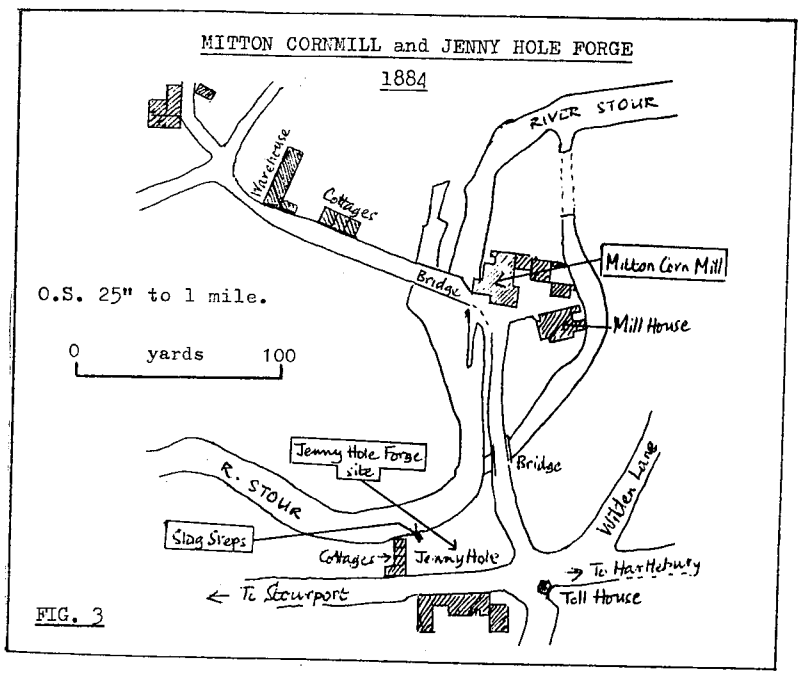

FIG. 3

When the spinning mill ceased work we do not know. The probability is that the building or its site was incorporated into the corn mill, for by 1895 this had become large and modern, with two 16ft. wheels, 6 double sets of rollers, 2 pairs of French stones, dressing machines, oat rolls etc.[18] The Blundell family continued as millers until 1896, then in 1900 the firm was Mitton Flour Mills, in 1904 Harper & Co., in 1908 Mitton Flour Mill Co., then finally for at least two decades until 1944, Clement Dalley & Co.

Simmons in 1945 described its machinery thus:- Two undershot waterwheels. The wheel on the north side was outside and uncovered, 15ft. 6in. by 7ft., floats 15in. deep with 9in. overlap; nameplate indicated that maker was Turton of Kidderminster; shaft was round, ribbed, 17in. diameter. Pit wheel 6ft., bevelled to 6ft. 8-arm wheel, elaborate shafting and belts drove 3 pairs of stones. The second waterwheel was 12ft. by 4ft. 6in. with 12-inch floats, and was on the west side, also uncovered but walled-in, with 8ft. pit wheel and horizontal shaft with three spurs, two of them driving stones, one driving the upright shaft. The stones were French burrs. It appears that the roller plant of 1895 had been replaced by stones, surely very unusual.

The mill building itself remained almost intact until it was demolished in 1978. The mill has now disappeared almost without trace. A vestigial weir under the road bridge, giving a fall of a foot or so in the river, presumably indicates where the original weir was, and a possible brick tail-race arch can be seen.

5. Mitton Wire Mill SO 821721

Between the viaduct over Timber Lane and the Upper Mitton canal bridge lies Wire Mill Farm, an 18th century three-storey building, and nearby, on a series of watercourses from the Stour, lie the remains of Wire Mill Forge. (See map in Fig. 4). It was owned by the Knight family of Wolverley, but, apart from that, little is known of its history. A photograph exists[19] of a large three-storey late 17th or early 18th century building on the forge site, which was later converted into cottages. Of this, a considerable block of brickwork remains, but in ruins, with blocks of sandstone on the east side of the Stour.

Nearby, on the west side of the Stour, are massive pieces of iron slag, half-buried in the ground. Among the overgrown ruins and foundations on the east bank is a tunnel which leads the water from the leat back to the Stour. Stone blocks from another small bridge lie by the footpath to the outbuildings of the farm, where there are garden walls capped by moulded slag blocks.

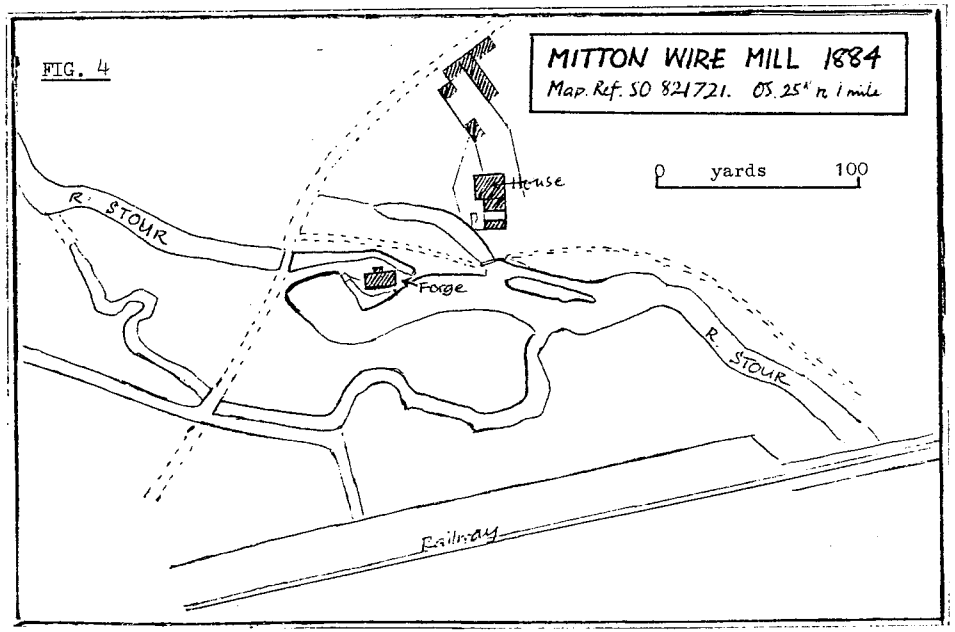

FIG. 4

6. Wilden Forge and Slitting Mill SO 824728

Wilden Forge dates back at least to the mid-17th century. It is believed to have been built, or converted to a forge, by the Wilmot family of Hartlebury who worked, if not controlled, several forges in the Mitton area. By 1669 however, it was under the control of Philip Foley, who probably built the slitting mill. It later became a tinplate manufactory (being the fourth oldest in the country), and in the 19th and 20th centuries it became a large ironworks under the control of the Baldwin family.

Wilden Forge lies almost half-way between Kidderminster and Stourport, on Wilden Lane. Of the two maps in Fig. 5, the smaller one is very crude, but shows clearly the canal or leat cut to bring water to the forge. The 1838 map is taken from a much better, but damaged, tithe map, and shows the works as it was just before the Baldwin family took it over.

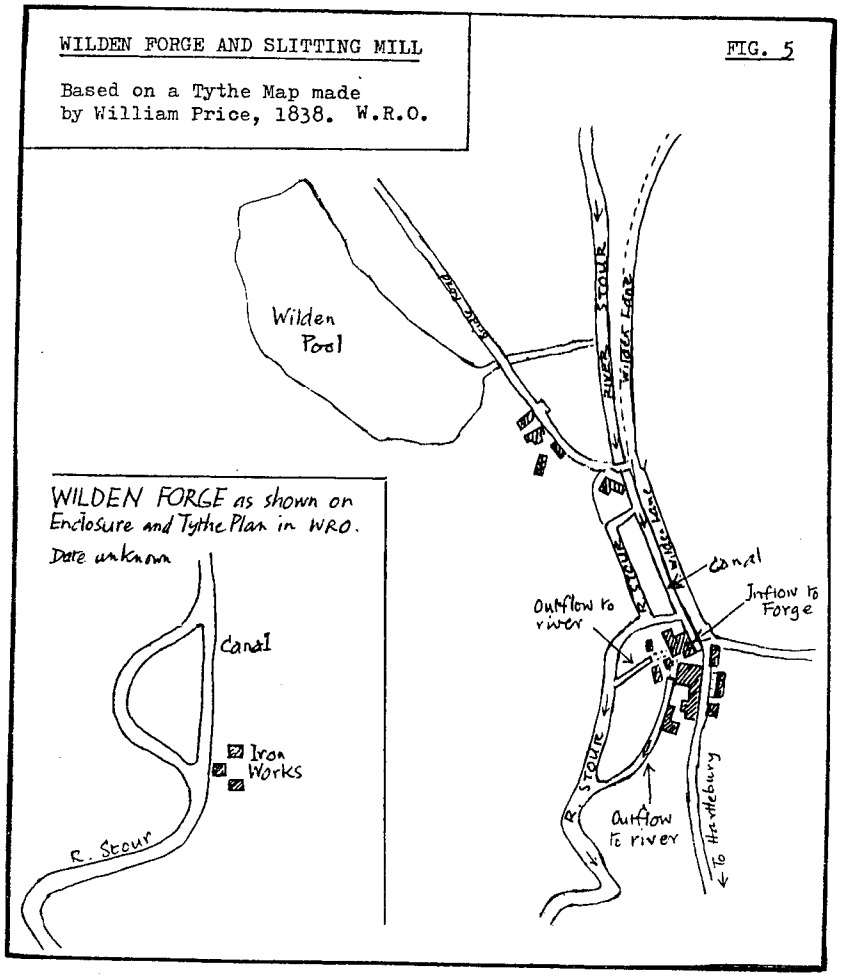

The forge was built on the R.Stour, but the cut was made (called the 'Canal', but not to be confused with the Staffordshire and Worcestershire Canal which runs half-a-mile west of Wilden, and probably came later than the Wilden cut) to bring the water of the river into the forge to work the great helve hammer and the slitting mill. The Wilden cut was also used later, in conjunction with the river itself, as a navigation from the works to the Staffs. and Worcs. Canal, with a towpath, connecting with that canal at Platt's Wharf, nearly a mile to the north.

The slitting mill had an annual output ranging from 203 to 316 tons over the years 1692-1705 and this was somewhat smaller than the outputs of the Wolverley and Cookley works higher up the R.Stour; but the annual output of the forge (i.e. bar iron) ranged from 274 to 345 tons over the same period and this markedly exceeded the outputs of the forges at Wolverley, Cookley, Whittington and Stourton higher up the river.[20]

The Wilden forge and slitting mill were under the control of the 'Ironworks in Partnership' (i.e. Foleys and others) for the years around 1700. The forge made 400 tons of iron in 1736 and 450 tons in 1750.[21] There are gaps in the 300-year history of Wilden Forge, but some of the known facts after 1750 are as follows:-

1789 Benjamin Pratt, one of the original partners in the Blaenavon Ironworks, was described in a lease of land in Monmouthshire as 'of Wilden Forge'. He died in 1794, leaving his share of Blaenavon, and presumably also of Wilden, to Thomas Hill junior, son of the senior partner at Blaenavon.[22]

1791 Wilden Forge was occupied by Thomas Hill, but owned by the Foley family. On a map of this date, Thomas Hill is recorded as occupying a tin-mill.

1812 A description of Wilden Forge was given when the works was sold 'part of lots' at the Stourport (Tontine) Inn on 13 March 1812:
'Lot XI. All those valuable Iron Works, called and known by the name of Wilden Forge, with Charcoal Barn, Timber House, Tenement and Garden and Piece of Land, occupied by the principal Clerk; likewise a large Reservoir of Water, situate in the Parish of Hartlebury, in the aforesaid County of Worcester, within one mile of the River Severn, and worked by that never-failing Stream the Stour, forming together one of the most powerful and completest Works of the kind in this Kingdom; now let to Thomas Hill Esq. under Lease granted Michaelmas, 1801, for 21 years.'
This was just one of the properties that was lost to the Foley family by the extravagance of the 3rd. Baron Foley.

c.1830 The works was now a wire works run on water-power; then a steam engine was introduced by Lewby, who traded under the name of Wilden Iron and Tin Plate Co. The firm came to grief after about ten years.

1840 Wilden Forge was taken over by Enoch Baldwin and his two nephews, Pearce and William. It later came under the sole control of Alfred Baldwin. Between 40 and 50 men were employed at the works at this time.

1880 The firm flourished under Alfred Baldwin, and carried off the only gold medal at the Paris Universal Exhibition in 1878 for tin-plate and sheet iron. The works at Wilden produced 75,000 boxes of tin-plate per year, using in various stages of manufacture 5,000 tons of pig iron, 150,000 bushels of charcoal and 21,000 tons of coal.

In the rolling mills: 'a great helve hammer driven by a 50-hp engine, and another by water-power, a wheel 20ft. diameter on the Stour, doing the shingling. Also a tin refinery, a puddling forge containing 4 puddling furnaces, capable of producing 11 tons per day. The charcoal forge has two large fires producing 1,000 tons of wrought bloom. These are hammered with the steam helve, then cut into blooms, when it is again heated on a hollow fire, where the fuel does not touch the blooms, and then they go to the rolling shops, which has 5 mills, 3 rolling up to 16 inches wide, and two from 20 to 26 inches wide.'

The state of development of the works in 1902 can be gauged from the map in Fig.6. The works still exist, but the 'canal' is very overgrown with weeds, and evidently no longer has a flow of water.

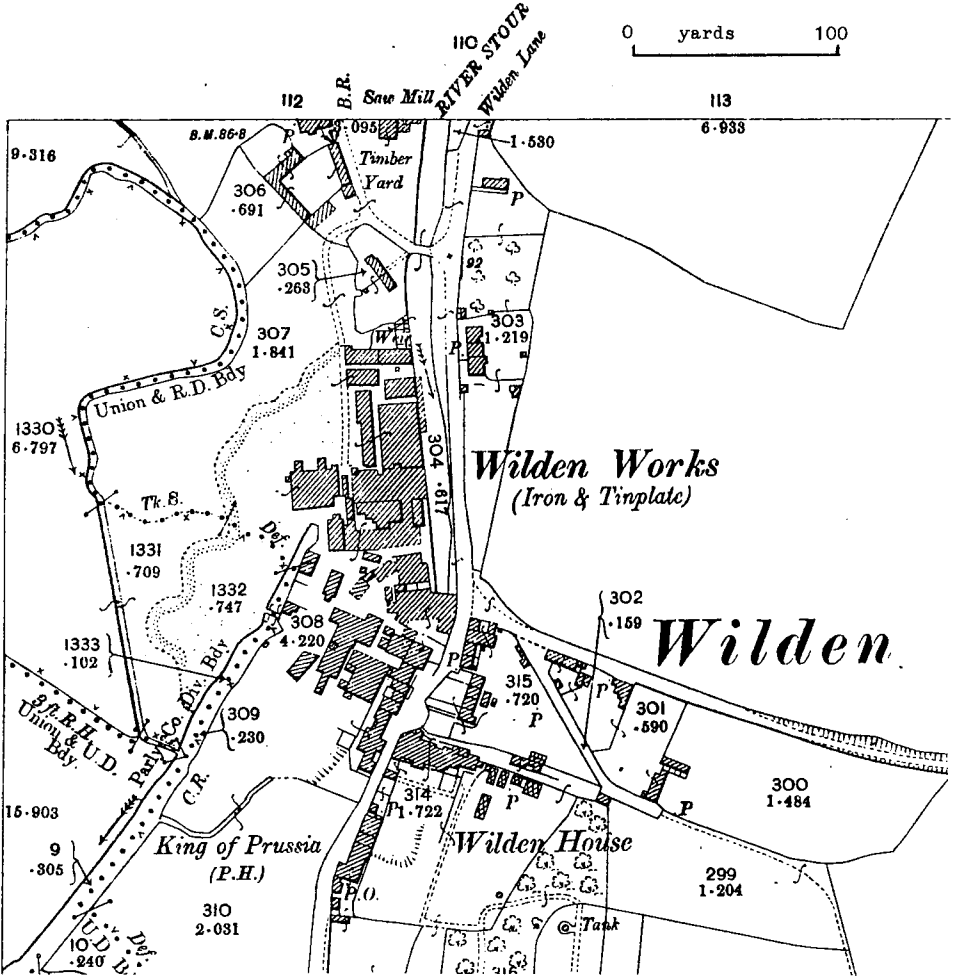

FIG. 6 Wilden Ironworks in 1902, from 25-inch O.S. map.

7. Falling Sands Ironworks SO 829748

This works comprised principally a slitting mill, and lay about a mile south of Kidderminster town centre, tightly sandwiched between the Stour and the canal, as shown in the plan, Fig.7. Production ceased in 1902. When surveyed by HWG in 1968 the walls had collapsed in heaps and were overgrown, but the watercourses and wheel chambers were well preserved. The building was of 18th and 19th century brick with some very old, thin bricks on the side furthest from the canal. These lay on large sandstone blocks, and were probably the remains of an earlier forge.

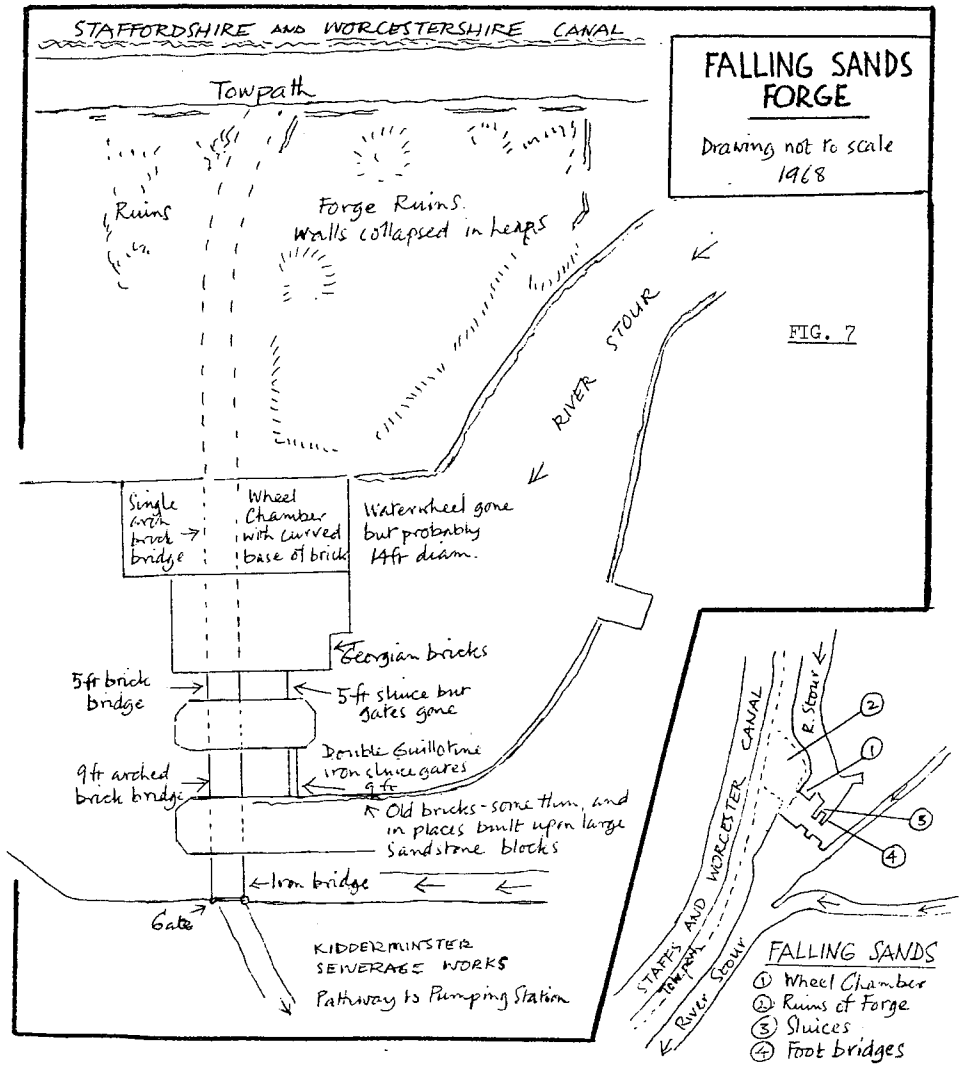

The first record seems to date from 1791, when the forge and slitting mill were owned by the Foley family, and tenanted by William Barnett. In 1809 it was advertised for sale, tenanted by Barnett at a rent of £100 p.a.[23] It was then described as the 'newly erected Slitting Mill with mill pond, on the River Stour', so there had evidently been some developments since 1791. It was again advertised for sale in 1852 on the death of its tenant, Samuel Barnett: it then had two waterwheels, one a breast wheel of 24hp working two pairs of rolls together with sheet and bar shears, the other undershot of 12hp working a 'drawing out hammer' in the forge.[24] According to the account books of the Turton brothers of the Caldwall Foundry, a waterwheel 14ft. diameter and 15ft. wide had been made by them and fitted at Falling Sands in April 1847 for about £250; this must have been the larger wheel. The great width was possible as it was using the greater part of the flow of the R.Stour, and was necessary to get the power as the available head was small; it would have been a low-breast wheel. It is not clear where the undershot wheel could have been situated. By 1859 the works were occupied by Messrs. Banks and Morgan (who also had Broadwaters Forge on the Wannerton Brook) making sheet iron and tinplate.

8. Caldwall Mill SO 829760

It is certain that this was a watermill because it was shown on Taylor's map of 1772, i.e. before any mills were steam-driven, and it was a corn mill because Tomkinson and Hall[25] state that Francis Best was the Corn Miller here in 1771 (he was then 67 and was murdered on a walk to Bewdley). This was probably the same mill that was insured by Daniel Best of Kidderminster in 1778, 'Water Corn Millhouse and Millwork therein on Stour Brooke, Kidderminster, Brick and tiled, £200. Utensils and stock £200.'[26]

It was a corn mill in 1829, for the following advertisement appeared in the Worcester Journal for 22 January that year:-

'To Millers & Others. To be Sold by Auction... on 3 February 1829 on the Premises at Cauldwall Mill near Kidderminster:- Six Pair Capital French Stones, one Pair of Derby ditto ., Two Dressing Machines, One Smut ditto. & Meal Trough: together with a Quantity of Fittings-up of Machinery of above Mill, the whole will be sold without the least reserve..'

Evidently it was a large mill. This sale was probably to clear the building in preparation for its conversion to a carpet mill. It was a carpet mill certainly by 1836, for in that year Messrs. Pardoe, Hoomans and Pardoe of Caldwell Mill were fined 10 shillings for employing a girl of 16 for more than 69 hours a week. We obtain a description of the mill in 1848 from an advertisement in the Worcester Journal for 28 September. It was for sale as a tenanted property:-

'All that first-rate FREEHOLD WATER MILL called CALDWALL MILL now used for spinning Worsted Yarn ... together with a large RESERVOIR ... The Mill has been rebuilt in the most substantial manner by the present Lessees, at an estimated cost of £4000 at least: the principal part is built fire-proof, extremely well arranged and lighted, and with a roomy and convenient stone and iron staircase, extending from the bottom of the mill to the top.

The Mill Wheels (from 20 to 24 horse power) are worked by an abundant and uniform supply of water from the Reservoir through which the River Stour runs.

The above Property is now in Lease to Messrs Pardoe and Hooman for the remainder of a term of 40 years which commenced on the 25th day of March 1829 at the Rent of £320 ...'.

In 1884 the carpet mills were in the hands of Messrs. Potter and Lewis, in 1900 Messrs. G.M.Whittall & Co., in 1945 Messrs. T. & A.Naylor. Mrs. Berkley in 1934 seemed to accept Caldwall Mill as still a watermill; when the use of water power ceased is not known.

Today there is no sign of Caldwall Mill except for a vestige of its weir which causes a short section of rapids in the river as the water loses about two feet in height.

There are some interesting and curious features in the historical record of Caldwall Mill that need to be discussed. One of these is the question of the identity and location of New Mill. According to Mathews' plan of Kidderminster dated 1835

(see Fig.8) the area south of Caldwall Hall was a large mill pool called 'New Mill Pool' at the southern end of which was a large building which seemed to correspond to Caldwall Mill, but which was named 'New Mill'. Broadfield's map of 1859 shows the same arrangement, but with the name 'New Pool', and only the word 'Mill' against the buildings. Now there was certainly a corn mill called New Mill in Kidderminster throughout the last two-thirds of the 19th century, for the trades directories give William Minifie and his family as millers there from at least 1841 to about 1870; but the address was Mill Street. From 1872 to 1900, D.W.Goodwin had both New Mill and Town Mill. This 'New Mill' must almost certainly have been a steam mill. So the New Mill of Matthews' plan must be assumed to be Caldwall Mill, perhaps regarded as 'New' because it had been recently converted to the carpet trade.

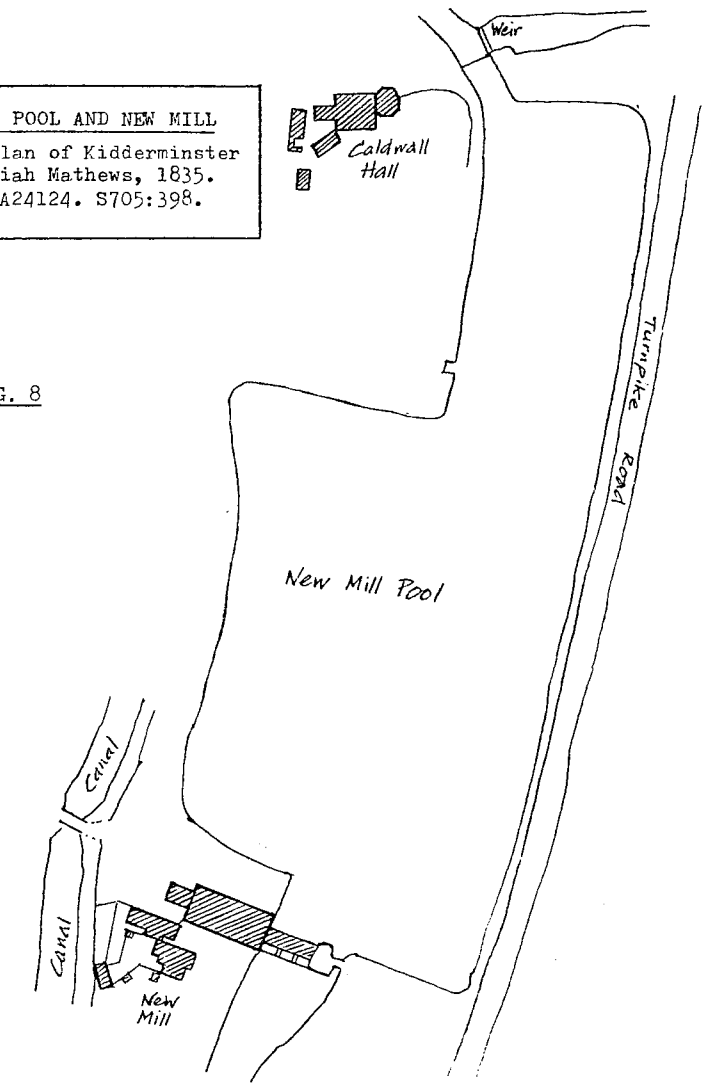

NEW MILL POOL AND NEW MILL
from a plan of Kidderminster by Jeremiah Mathews, 1835. W.R.O. BA24124. S705:398.

FIG. 8

It will be noted that Matthews showed an overflow weir on the river at the northern end of the New Mill Pool. Although the pool had gone by the time of the 1st. edition 6-inch O.S. map of 1888, and there is no longer a weir here, it is interesting that the overflow channel, which has provision for sluice gates, to this day carries a good flow of water round to the old Vicars Brook, or Back Brook, which rejoins the Stour well below the mill site. Doubtless the mill wheels operated in the main stream (as there was never a separate leat) and the loop channel was needed even after the pond was dispensed with, to cope with fluctuations in the mill load and in the river flow. The purpose of its retention now that there is no obstruction to flow in the main channel is not immediately obvious.

Another curious and related item is the fact that in a map of mills on the Stour to which the date 1862 has been assigned,[27] Caldwell (sic) Mill is shown on a small tributary a little to the west of the site described above; this would have left room for a New Mill on the Stour itself. However, it is clear from the advertisement of 1848 quoted earlier that Caldwall Mill was a large one then, and definitely on the R.Stour and Mathews' New Mill Pool. Besides, Taylor in 1772 had shown Caldwall Mill on the main river, above the confluence of the small tributary. It is therefore concluded that the 1862 map is incorrect.

9. Town Mill(s) SO 827768

It is probable that one or more of the mills entered in the Domesday Survey of 1086 were on this site. John Doharty's map of 1753[28] shows the Town Mills with the watercourse arrangements just as they remained until comparatively recently. In 1809 and 1813 the mill had five pairs of stones.[29] In 1809 it was insured for £900 (Buildings £500, waterwheel and machinery £400).[30] Nineteenth-century millers were: 1820 and 1829, Benjamin Turrall (Thomas Turrall also in 1828 and 1835); 1835 and 1841, John Turrall; from the late 1850's, Daniel Wagstaff Goodwin (born 1821, died 1890, Mayor in 1874 and 1884); later D.W.Goodwin & Co.

In 1881 the watermill was extended by the addition of a new brick steam mill between the watermill and the road. The steam mill was of four storeys, and the building still stands, though as a motor-cycle sales depot; it has not been used as a mill for some 50 years. The date 1881 appears on the gable above the fourth storey. In 1903 the steam power was 160 hp and the watermill had two waterwheels.[31] A photograph of the watermill[32] taken just before demolition in the 1930's shows a large 3-4 storey building with a lucam; and a photograph of one of its waterwheels,[33] exposed by demolition of the building, shows a paddle-wheel with about 30 wooden paddles with circumferential iron-bar bracing, eight iron arms, iron axle and a large pit wheel with its teeth inside its rim. There is little to indicate size, but the waterwheel was probably about 12ft. in diameter and about 4ft. wide. This was, no doubt, the wheel for which Turtons supplied the ironwork to D.W.Goodwin on 12 June 1867: '2 rings, arms and naves 10ft. lin. dia. cast in 2 parts for 30 cast iron starts....'

By 1903 Goodwin & Co. had had a wharf on the canal at SO 828(5)771 for perhaps 20 years,[34] and had by then linked it to the mill by a private tramway line about 290 yards long. (See map in Fig.9) The wagons had special hopper bottoms, which enabled them to unload their contents directly on to an elevator which took the grain to the top of the building.

The present channel of the R.Stour uses the old mill race as far as its final overflow channel near the mill, then follows this overflow channel, and not the tail-race. The original overflow channel from the weir some 200 yards above the mill is not now used, and no longer exists.

ACKNOWLEDGMENTS

We would like to acknowledge with gratitude the use of the facilities and the help of the staff at the County Record Office at Worcester, the Kidderminster Public Libraries, the Kidderminster Museum, the Birmingham Public Libraries and the Library of the University of Birmingham. Our thanks are due to Mr. D.T.N.Booth for the information from the account books of the Turton brothers.

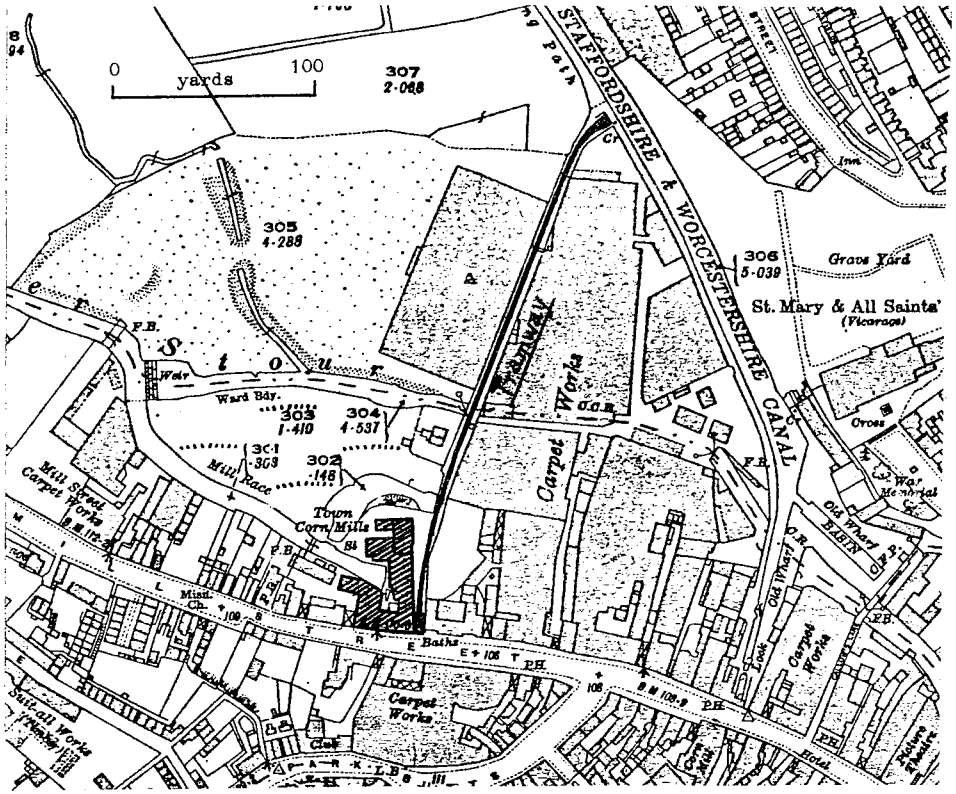

FIG. 9 Town Mills, Kidderminster, from 25-inch O.S. map of 1924.

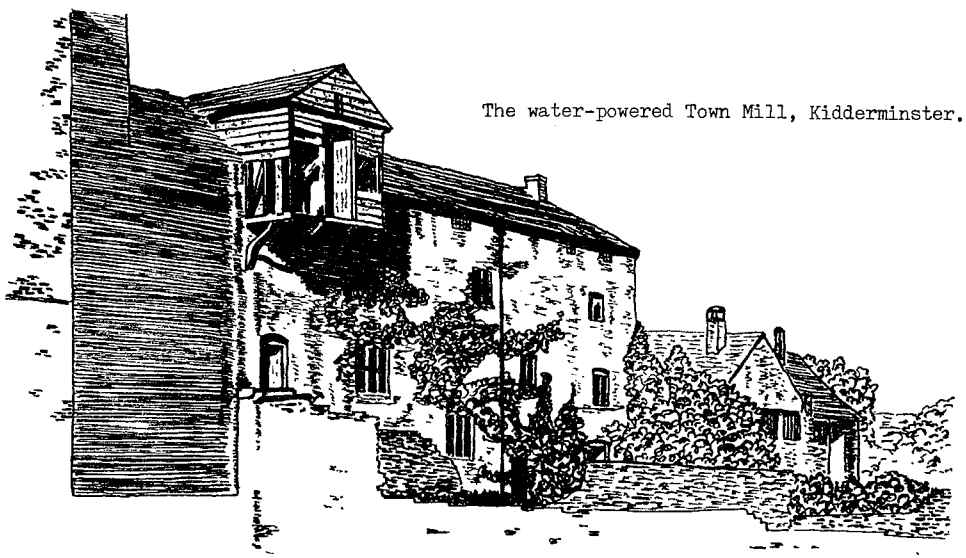

The water-powered Town Mill, Kidderminster.

REFERENCES

1. J.D.Briggs and G.Tucker, W.& W.M.,2,1981,pp.6-15 and 3,1982,pp.2-19.
2. J.Briggs, G.Tucker & H.E.S.Simmons, W.& W.M.,1,1980,pp.30-44.
3. H.W.Gwilliam, W.& W.M.,2,1981,pp.2-5 and 20-31.
4. The information in this paragraph comes from 'Victoria County History of Worcestershire', Vol.2,p.301 and Vol.3,pp.161,163 & 385.
5. V.C.H.Worcs.,Vol.2,p.301 and Vol.3,p.165
6. V.C.H.Worcs.,Vol.3,p.158.
7. Parish boundaries taken as defined on 6-inch O.S. maps of 1883.
8. Mrs. Berkeley, 'Old Worcestershire water mills', Trans.Worcs.Archaeol.Soc., 11,1935,pp.14-32 with Plates I-V.
9. E.W.Hulme, 'Statistical history of the iron trade of England and Wales, 1717-1750', Trans.Newcomen Soc.,9,1928,pp.12-35.
10. Ibid.
11. B.L.C.Johnson, 'The Foley partnerships....', Econ.Hist.Rev.,2nd series,4, 1951-2,pp.322-340; see particularly Fig.1.
12. The name Hammersmith does not seem to be documented, but is used by local tradition.
13. Worcester Record Office.
14. The Knight family was much concerned with the iron industry; many of their papers are in the Kidderminster Public Library.
15. Birmingham Gazette, 12 May 1823, cited by Simmons.
16. Pigot's Directory of Worcs.,1835.
17. Ibid, 1829 and 1835.
18. Advertisement for lease in The Miller, 7 Oct.1895.
19. Photograph of Mitton Wire Mill in the files of one of the authors (H.W.G.).
20. B.L.C.Johnson, op.cit.
21. E.W.Hulme, op.cit.
22. G.Rattenbury, 'Cwm Dee Rail Road', J.Railway & Canal Hist.Soc.,27,1982,p.98.
23. Worcester J., 9 March 1809, cited by Simmons.
24. Midland Counties Herald, 9 Sept.1852, cited by Simmons.
25. K.Tomkinson and G.Hall, 'Kidderminster since 1800', Kidderminster, 1975,p.146.
26. Sun Fire Insurance Policy No.403713, 9 Oct.1778, cited by Simmons.
27. Birmingham Central Library, Local Studies Dept., ref. No.396450.
28. 'An Exact Plan of Kidderminster', reproduced in the book by Tomkinson and Hall.
29. Advertisements in Worcester J., 9 March 1809, and Birmingham Gazette, 21 June 1813.
30. Royal Exchange Fire Insurance Policy No.246848 of 24 June 1809, cited by Simmons.
31. Tomkinson and Hall, op.cit., p.54.
32. Kidderminster Public Library, Photograph No.901.
33. Ibid, No.882.
34. It was shown on the 1st-edition 6-inch O.S. map of 1888, connected to the mill by a lane.

BEDFORDSHIRE WINDMILLS

by PETER DOLMAN

Bedfordshire is a county with no independent identity, either topographically or molinologically. Situated between East Anglia, the Midlands and the Home Counties, its windmills exhibited features found in each of these regions, all within one of the smallest English counties. Although well served by watermills, notably on the Great Ouse, Ousel, Ivel and their tributaries, Bedfordshire has had a fair sprinkling of windmills over the centuries, some of which were (and are) extremely interesting. I have located the sites of over 140 and at the peak of windmilling during the first half of the 19th. century there were some 45 at work, mostly for grinding corn. This article lists all the windmills which have stood since 1840, when the decline began.

Aspley Guise SP 930364

This was a small open-trestle post mill of considerable antiquity and stood on a mound near a watermill. It had 4 common sails and was winded by a tailpole. The body was unusual in being clad with vertical boarding. It ceased work around 1890 and was pulled down at about the turn of the century. The mound has now become a green on a golf course.

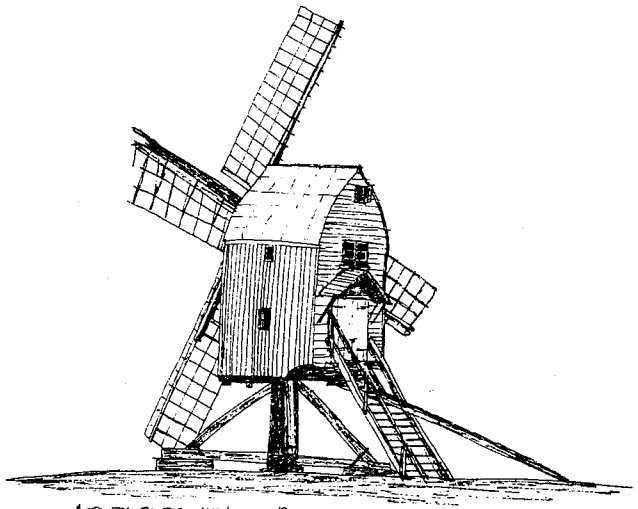

ASPLEY GUISE MILL c.1900

Barton Le Clay TL 076311

This small open-trestle post mill stood on the bank of the pond by the watermill and was erected about 1835. A newspaper sale notice of 1857 described it as a 'newly erected post windmill with 2 spring and 2 cloth sails, driving one pair of 4ft. 6in. French stones'. It is subsequently said to have been moved to an earlier mill site on Barton Hill T.L. 082294 and was blown down in about 1870.

Bedford TL 053498

This was a large smock mill, built in 1842 by two millwrights by the name of Attack. It was a combined flour and saw mill and could be driven by wind or steam. It must have been a tall mill as it was almost in the centre of the town. Unfortunately it caught fire in 1884 as recounted at length in the Bedford Mercury of 10th February in that year. It was almost totally destroyed and must have bankrupted its owners (the two millwrights) as it was not rebuilt and they are not heard of again.

Biggleswade TL 188440

This was undoubtedly the finest tower mill in the county. Standing some 70 feet to the top of its ogee cap, it was built on a new site in 1860. It worked by wind until the 1930's then carried on by engine for a number of years. There were 3 pairs of overdriven stones, 2 French and 1 Peak, driven by 4 patent sails. The cap was winded by a fantail and most of the machinery was of iron. It was demolished in October 1966.

Bolnhurst TL 094602

This post mill was dated 1764 and for most of its life remained in the Sharman family. It was a small mill with a small roundhouse and was driven by two spring and two common sails. There were two pairs of stones and latterly a steam mill stood nearby. The mill was pulled down in 1920 and the site remains visible in an orchard. Six peak stones are let into the ground near the house.

Colmworth TL 112574

This post mill was built between 1803 and 1815, possibly on a site occupied by a mill as early as 1227. It was an open-trestle mill, with two pairs of stones driven by two spring and two common sails (which were taken to Bolnhurst mill). It ceased work in 1898 and was pulled down in 1906. The site can still be seen behind the cottage.

Cranfield

Gossard's Green SP 960436. This tower mill was built by William Anstee in 1848 on a new site. It had an adjacent steam mill and worked until about 1900 when it was burnt out. The bricks were used to build some cottages near the site.

Broad Green SP 960429. There was a mill on this site in the early 16th century, for in 1542 it had been 'laid to ground for many years' so that its rent of 60 shillings had not been paid. The post mill was worked in conjunction with Bromham watermill in the 1830's and 40's. It was sold to Charles Hyde in 1847 who shortly afterwards had the fine tower mill built, probably by the millwright William Anstee. It was about 55 feet high, its boarded ogee cap being covered with sheet iron. The 4 patent sails drove 3 pairs of stones, 2 peak and 1 French. Other machines such as dressers and crushers were installed and the mill presented a fine sight in its prime. The last sails came off Houghton Conquest mill in 1910, two of which were removed in the 1920's. It worked until 1935 when one sail was wrecked in a tail wind. Latterly the 10 year old son of the owner worked it as his father was injured when the steam boiler burst. It was demolished in 1966.

Dean with Shelton

Lower Dean TL 041698. This amazing mill was rebuilt in 1762 with parts from a mill of 1600. In 1834 it was 'modernised', gaining a two storey 'Midland' roundhouse and 4 patent sails. A fantail was fitted above the rear gable, which drove down to a rack around the roundhouse. A curb was fitted, with rollers under the body although it remained a true post mill and not a composite mill. It drove one pair of peak and one pair of French stones and ceased work in 1918. It stood

as an impressive wreck until it collapsed in December 1959. The remains were gradually cleared away and the roundhouse was converted into a cowshed in 1969. A fine, although slightly inaccurate model of the mill can be seen in Luton museum, made by the late Fred Woodbridge.

Upper Dean TL 040681. The present tower mill was built in 1856-7 near the site of an earlier post mill which had been pulled down c. 1830. It is a small mill with 1 pair of peak and 1 pair of French stones, and a wire machine. The cap (now missing) was domed and was similar to other mills in the area. Four patent sails and a fantail were fitted. After ceasing work in 1906 the mill has become a ruin although it still carries the remains of two sails, which still turn occasionally.

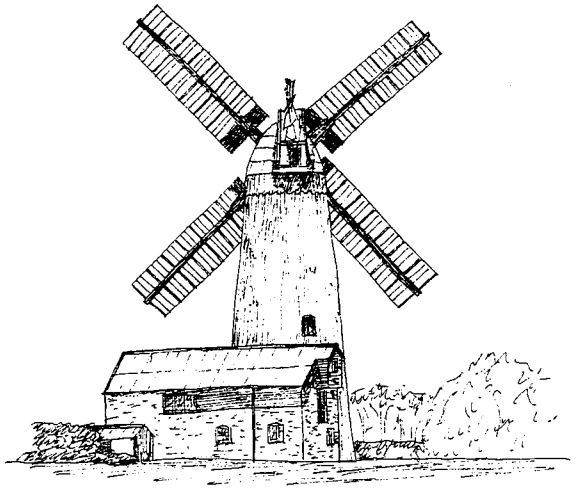

BROAD GREEN, CRANFIELD c.1915

Dunstable TL 014218

This once fine tower mill was built for Matthew Gutteridge in the late 1830's. In shape it resembles Houghton Conquest and may be by the same millwright. It had a squat ogee cap and was about 55 feet high. Four patent sails and a fantail were fitted, driving 3 pairs of stones. Steam power existed by 1869 and latterly it was worked by gas engine. The sails went out of use in the 1900's and it ceased work in the 1930's. In 1942 it was converted into a headquarters for the local sea scouts and it still stands proudly in West Street.

Eaton Bray SP 984188

This was said to have been a tower mill, owned by the Buckmaster family of Totternhoe. It is possible that it was used as a whiting mill (crushing chalk). It was built between 1835 and 1848 and was demolished by 1880.

Eaton Socon

Duloe Mill TL 171602. This tower mill was built in 1815 to replace a post mill that had burnt down. It is unusually shaped, with very little batter. The original cap was literally 'conical' in shape with a fantail and four single sided patent sails. Three pairs of stones were fitted. Work ceased in 1916 and after standing disused for a while it was gutted and house converted in the late 1940's. The windshaft is still in place and is of oak, with an iron poll-end. Due to recent boundary changes the mill is now in Cambridgeshire.

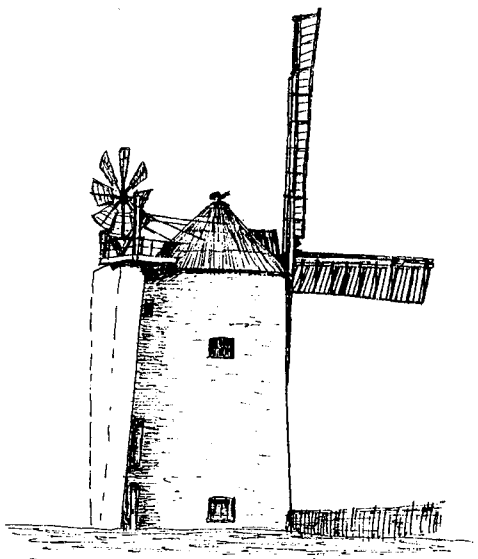

DULOE MILL, EATON SOCON c.1910

Flitwick

Denel End TL 027355. This small smock mill was built in 1851 by the millwright Thomas Course. One pair of peak and one pair of French stones were driven by two patent and two common sails. The ogee cap was winded by a fantail and a steam engine helped out latterly. It was burnt out in 1903 and the bricks of the base were used to build a stable which still remains at the site.

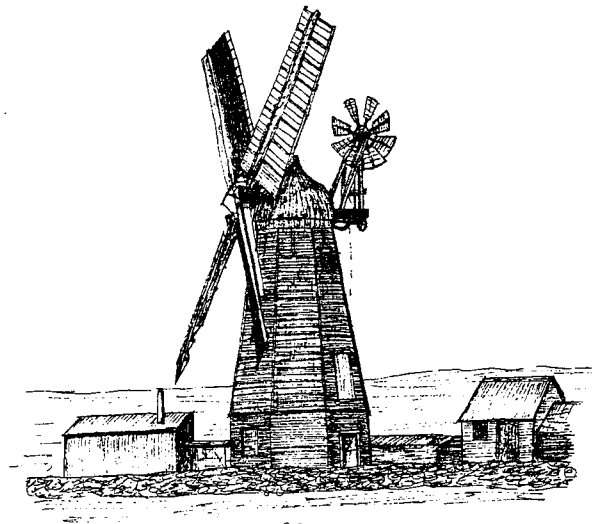

FLITWICK MILL c. 1900

Great Barford TL 123532

This small smock mill was built in about 1835 for Edward Trustrum. It had two spring and two common sails driving one pair of peak and one pair of French stones, latterly with steam power in addition. The conical cap was winded by a fantail. It was pulled down in 1908 and the base was cleared away in 1925.

Haynes

Northwood End TL 098418. This open-trestle post mill was built in 1815 and stood until c. 1855. Little more is known about it except that the property also included a brewery, which carried on after the mill's demise.

Henlow TL 176389

This small smock mill was built in 1819 and worked until the early 1920's. It was winded by a chain wheel at the rear of the ogee cap. Four patent sails drove two pairs of stones. It was dismantled in the 1930's and was pulled down in 1963. The shell of the base remains.

Houghton Conquest TL 047423

This tower mill was built on the site of a post mill, probably in the 1830's. After a gale took off the cap in 1877 it was rebuilt with a fantail and patent sails. It worked until 1910 when the sails were taken to Cranfield mill. It drove three pairs of stones which were removed in the 1950's. It became very derelict until 1975 when the windshaft fell through the mill, smashing the great spur wheel. All the components were saved however and the spur wheel has been repaired and fitted to Stretham mill in Cambridgeshire. The wallower and upright shaft are now at Paston mill in Norfolk, where they will eventually be installed. The tower is now an empty shell.

Houghton Regis TL 013238

This tower mill was built to replace a smock mill in the early 19th century. Four patent sails and a fantail were carried by an ogee cap and three pairs of stones were driven. Work ceased in 1914 and it was dismantled and converted into

a water tower in the 1920's. Only the lower 5 feet of the tower remain, in a disfigured state.

Hulcote and Salford

Holcot SP 942382. This tower mill was built by William Anstee c. 1850 to assist the adjacent water mill. It did not prove a success and in 1882/3 it was dismantled and the cap, sails and gear went to a new mill being built at Spaldwick in Huntingdonshire. The two storey stump remains and this was house converted in 1974.

Husborne Crawley

Crawley Kiln SP 966360. This was the brick and tile works serving the Duke of Bedford's Woburn estate and in about 1830 a horizontal windmill was built to drive the pug mill. A water colour of c. 1835 shows it as being of the 'hinged vane' type, about 15-20 feet high and 15 feet in diameter, mounted on the roof of an open shed. It probably went out of use fairly quickly as such mills were expensive to maintain. It had gone by 1884.

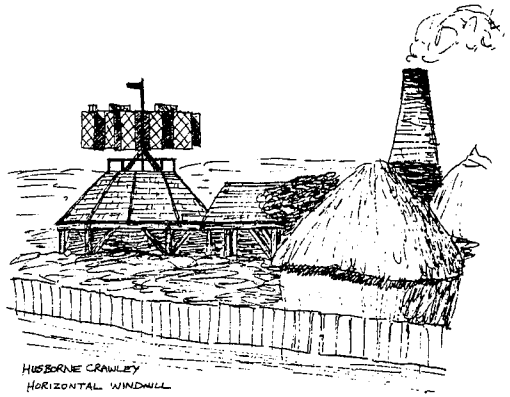

HUSBORNE CRAWLEY
HORIZONTAL WINDMILL
From a Painting by Thomas Fisher c.1835.

Keysoe TL 077627

This mill stood on an ancient site on which a mill was standing in 1295. The last mill was built in 1800 after its predecessor had been burnt down. It was a post mill with a straight pitched roof and 'Midland' roundhouse. There were two spring and two common sails driving 1 pair of French and 1 pair of peak stones. Work ceased in 1942 and it was regrettably blown down in 1946. It was gradually cleared away and now only the foundations and a few fragments of machinery remain.

Langford TL 187412

This mill was built for John West in 1818 and had been replaced by a steam mill by 1884. I have been unable to find out when it disappeared or what type it was but would hazard a guess that it was a smock mill.

Leighton Buzzard

There were several mills here during the 18th and 19th centuries. One post mill was moved to Whipsnade in about 1860 from Shenley Hill (SP 923258). A mill at Stonhill (SP 928243), possibly a tower mill, was built in the early 19th century and was burnt out in about 1870. The best windmill in the town was at Beaudesert (SP 924253). This was a stone tower mill, built in the early 19th century with four common sails, winded by a chain wheel at the rear of the boat shaped cap. It drove 2 pairs of stones and was re-fitted in the early 1840's.

Latterly it is said to have had 6 patent sails and it was demolished in the late 19th century.

Luton

Luton had several mills, both wind and water. A post mill (TL 100207) was blown down in 1845. An old smock mill (TL 088222) stood until the late 19th century. The best known windmill was at Biscot (TL 076232). Built to replace a post mill in 1844, it was a smock mill with a domed cap, fantail and four patent sails, driving three pairs of stones. It ceased work in 1925 and was pulled down in 1938. A public house, named after the mill, now marks the site.

Maulden TL 081377

This curious contrivance was built in about 1880 by James Norman, a local carpenter. It apparently resembled a barn, with a raised turret at one end which carried the sails, which were fixed in one direction. There were four shuttered sails, driving two pairs of stones and it was pulled down in 1903. It is a pity that no photograph of it seems to have survived.

Melchbourne and Yielden

Yielden Mill TL 011657. A mill stood here in 1360 and the deeds of the last mill went back to 1749. It was a post mill, although further technical details are not known. It got out of control in a gale in 1877 and caught fire, burning completely to the ground.

Potton TL 213498

This once fine tower mill was built in the 1840's to replace a post mill with roundhouse for John Smith. It was very well constructed and originally had six patent sails driving four pairs of stones, 2 peak and 2 French. In 1879 the sails were blown off and only four were put back on. The mill had a long raised catwalk to the nearby granary and because of this the striking gear was operated from a 'cage' under the fan stage. It ceased work in January 1928 when the fan froze up, allowing the mill to be tail winded. It was dismantled in the early 1950's and the shell, half its original height, is all that remains.

Riseley

There were two mills here. A smock mill TL 047625 stood on the site of a post mill known to have been standing in 1659. This mill was surveyed in 1841 and was found to require a new post at a cost of £40. It was presumably decided to rebuild it rather than to repair it. It was demolished in about 1900.

The other mill was a post mill (TL 046625) which was built c. 1820 on a new site. It was a larger mill than most in the area, with a tall body and large roundhouse. Two spring and two common sails drove two pairs of stones in the head, the wallower and great spur wheel being solid wood. It ceased work in 1916 and was demolished in 1947

Sharnbrook SP 998593

This small tower mill was built for Thomas Gell in 1816 to assist his water mill (now house converted). It is built of local oolitic limestone and had a domed cap. It was winded by means of a braced tailpole and winch, a somewhat primitive feature in an area where the fantail predominated. Power came from four patent sails and it drove two pairs of stones. It ceased work c. 1900 and the sails were removed in 1920. It stood derelict but largely complete until 1967 when it was gutted and converted into a clock tower in the garden of a large modern house. All the gear was scrapped; the wooden upright shaft was sawn in half to form gateposts. It was a terrible waste of an interesting mill.

Shefford TL 149395

This is actually just inside the parish of Southill but was built to supplement Shefford watermill in 1835. It worked until the 1880's and after becoming a ruin was dismantled in 1929. It had four patent sails, a fantail, and drove three pairs of stones. The roofed-over tower is now a store.

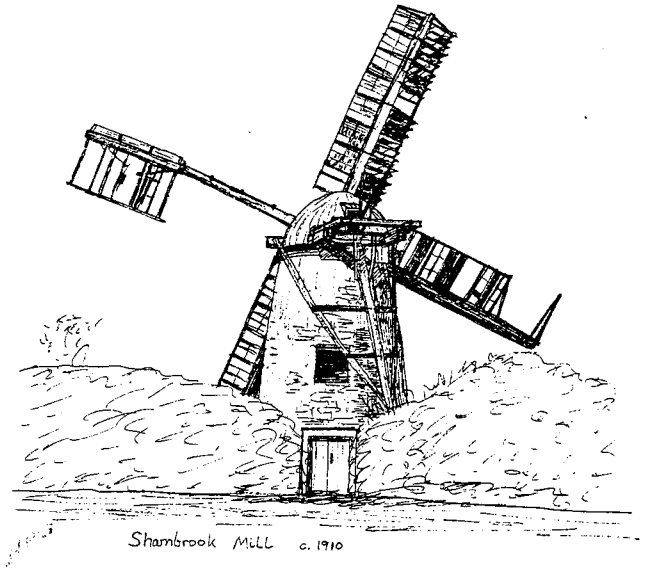

Stanbridge SP 962245

This tower mill is said to have been built in 1800 although map evidence puts it between 1825 and 1837. It worked until 1885 and then slowly became derelict until it was gutted and house converted in the late 1940's. It had an ogee cap with a fantail, two common and two patent sails, and drove two pairs of stones. A superb example of a mill mound is nearby (SP 965246) where a post mill stood until c. 1675.

Stevington SP 992528

The most famous mill in the county was originally built in 1770 (one of the crosstrees is dated) for Richard Pool. It worked until November 1919 when a sidegirt broke while it was running, almost causing it to collapse. It was subsequently dismantled and the body was completely rebuilt, to a different design to the original, incorporating a curious iron gambrel roof, now the mill's 'trademark'. As built it was an open trestle mill (the roundhouse being added very late) driving two pairs of stones through compass arm head and tail wheels. Latterly the French stones had been removed and a clasp arm brakewheel installed. Power came from four common sails and it was winded by a tailpole. It ceased work in 1936 and after a short period of dereliction was restored in 1951 by Bedfordshire County Council. It is open to the public and the keys are available in the village.

Sundon TL 043267

This open trestle post mill was standing by 1712 and worked until about 1845 or so when it was moved to Toddington. The site was obliterated in 1973 by quarrying.

Thurleigh TL 047587

A late 18th century post mill at this site blew down in 1881 and was replaced by the fine tower mill. Various parts from the post mill were re-used such as sail whips in the floors and possibly the brakewheel. The new mill was built for Benjamin Jefferies and worked until 1917, latterly with steam assistance. One

sail was blown off in 1917 and the others, together with most of the machinery, were removed in 1940. It continued to decay and in 1982 was bought for house conversion. There were four patent sails and two pairs of stones, one peak and one French.

Tilbrook

Now in Cambridgeshire, this parish belongs historically to Bedfordshire. Two post mills stood here. The North Mill (TL 088706) was standing in 1689 and stood until about 1890. The West Mill (TL 070694) was built in the late 18th. or early 19th. century and was a large mill for the area. A 'Midland' type roundhouse was added in 1835 and it had four patent sails. It was winded by a tailpole and had two pairs of stones in the head, overdriven by a wooden wallower and great spur wheel. It ceased work in 1908 and was pulled down in 1956.

Toddington

Two open trestle post mills stood here. The Tebworth road mill (TL 001285) was moved from Sundon c. 1845 to an earlier site. It was still working in 1882 but was blown down at about this time. The mill on the Westoning road (TL 016293) was standing by 1706 and was blown down in the 1870's. Both mills had four common sails and a photograph of 1858 has survived of one of them, although it is not clear which.

Totternhoe TL 012016

There was a windmill near the watermill by 1614. 'Dolittle Mill' is the most interesting mill in the county to survive. It was built in the 1820's as a combined wind and water mill. The watermill has an overshot wheel (now collapsed) which drove two pairs of stones, 1 peak and 1 French, by means of a lineshaft and counter gearing. A large silk reel dresser and the remains of a wire machine also remain. The windmill belonged to an earlier period. The wallower is solid wood, the upright shaft is wooden and the great spur wheel is of compass arm construction. One quant with a wooden stone nut also survives, as does one of the two bedstones, a 'Cullen' or 'Blue' stone. The junction between the windmill tower and the rectangular watermill is very interesting, with vaulting, wooden beams and cast iron columns being used. The mill had a curious cap, something between a gambrel and a boat shape, with a fantail. Four patent sails with internal striking gear were carried. The cap was blown off in about 1868 after which water power alone was used, ceasing work in 1925. It now stands in poor condition, but largely complete and is a prime candidate for preservation.

Whipsnade TL 011178

This post mill was moved from Leighton Buzzard in about 1860 for David Twiddle. It had a roundhouse, having been open trestle before the move. It was pulled down in 1877.

Woburn SP 941329

This smock mill was built by John Attack (see under 'Bedford') for the Duke of Bedford in 1798 for a cost of £396/9/3. Its cap was covered with copper and it was winded by a fantail. Two pairs of stones were driven but for some reason, perhaps gale damage, it was dismantled in 1804. The machinery was adapted for Husborne Crawley watermill which was being reconstructed at this time and the following year the base was turned into a cottage, being further extended in 1894. This still stands as a reminder of a very short-lived mill.

References

Most of the material for this article comes from original research carried out by the author in Bedford Record Office during 1972-4, from deeds, estate records, maps and newspapers. This was supplemented by field work during which most of the old sites were visited. An excellent early reference work was written by J.Steele Elliott in 1931 and a new book covering both wind and water mills by Hugh Howes is published by the County Council.

THE HORIZONTAL MILLS OF HAZARA

by JOHN K.G. BOUCHER

A Description of the Horizontal Watermills which are still to be found in large numbers in the Himalayan regions of Pakistan

INTRODUCTION

When the late Lord Wilson wrote 'Watermills with Horizontal Wheels' in 1960, he was able to say but little of mills in Asia. He did, however, 'have little doubt that tens, if not hundreds of thousands of these mills may still be found until the march of progress sweeps them away'.

How right he was! It is unfortunate that his travels had not taken him further east, because he would have found areas where large numbers of mills are in intensive daily (and nightly) use, and he would not have had to rely on archaeological evidence, or the very occasional mill to be found still in use in Southern Europe.

I count myself most fortunate to have recently made several visits to an area on the Western flanks of the Himalayas where these mills proliferate and form an essential part of village life. There one steps back into biblical times where the entire process of food production is carried out by hand. Even corn is laboriously cut with small sickles and tied into sheaves before being threshed and winnowed in the breeze.

Farming is carried on at a subsistence level, the small terraced fields on the precipitous hillsides being inaccessible to machines. Donkeys are frequently used to transport the grain down to the valley bottoms for milling, but it is not uncommon to see the farmers themselves carrying sacks on their backs for miles, springing with agility from rock to rock down the narrow mountain tracks, and climbing laboriously back up again afterwards.

The mills in the region are used exclusively for milling cereals, mainly maize and wheat, but occasionally mustard seed and other grains.

This does not claim to be a comprehensive treatise on horizontal mills in the east, but rather a record of observations made on perhaps two or three hundred of them in one particular area. Literature on horizontal mills generally is scarce, and on Asian mills almost completely lacking. I hope, therefore, that this will go some way towards filling the gap and I will be pleased to hear from anyone with further details of mills in other parts of the region.

LOCATION (see map on p.42)

The Hazara region of the North West Frontier Province of Pakistan (roughly 34°N 73°E) is a well populated area of scenic grandeur in the Western flank of the Himalayas, bordering on to Kashmir. The area is characterised by successions of deep channels or 'nullahs' cut by erosion through the alluvial fill that has formed within the older valleys of the parent rocks.

Towering mountains rise thousands of feet from the valley floors and the snow capped Nanga Parbat, at 27,000 feet the third highest peak in the world, dominates the skyline to the north. In the region, habitation and cultivation rise to over 12,000 feet; there is a marked contrast between the warm days and cool nights and snow settles down to levels of about 6,000 feet in winter. Heavy rain occurs during the monsoon in July and at certain other times; the storms are generally of short duration but lead to problems of flash flooding. The area is liable to earthquakes of moderate intensity.

Perennial streams rise from springs on the slopes of the mountains and descend rapidly to the floors of the major valleys down at 4,000 feet. The largest

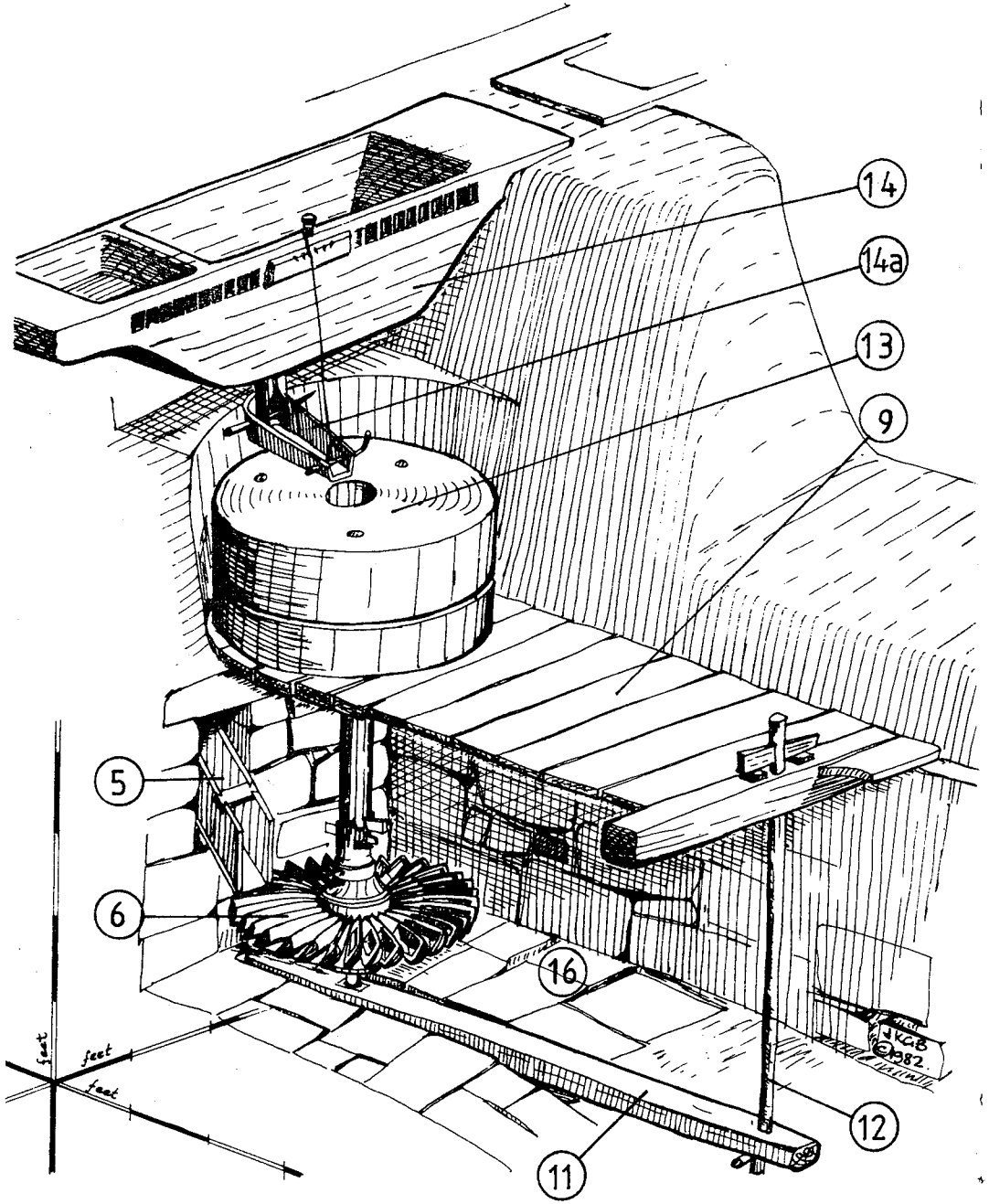

Fig. 1 The Mill Machinery

concentrations of mills are to be found at the lower levels; this however creates transport problems, and the subsistence farmers from the higher levels have to descend very considerable distances to have their corn ground.

The natural barriers to communication lead to many local differences within the region; local dialects and even languages vary from one valley to the next, the nomadic tribes coming over from Afghanistan in the summer adding further variety to language and dress. These variations extend to construction of the mills, marked differences in detail occurring between mills in valleys which might only be 10 miles apart on plan.

For instance, along the Dor River, which discharges into the Tarbela Dam on the River Indus, all the mills observed contained only one pair of stones per building, and groups of six or eight separate buildings were common. Furthermore, in these mills the bridging tree was invariably mounted transverse to the flow of water.

On the other hand, in the Siran River system a few miles to the north, also discharging into the Tarbela Dam, it was normal to find from two to four pairs of stones within one building, with their bridging trees in line with the flow of water. In one group of mills there were fourteen pairs of stones in four buildings, fed from a common leat.

PRINCIPLE OF OPERATION

The horizontal waterwheel is in reality an impulse turbine. A large volume of water flowing down an inclined spout impinges upon the blades or arms of a horizontal wheel, the vertical shaft of which is extended upwards to drive a pair of mill stones (or other equipment) on the floor above. (Figure 1). There is no gearing involved, which means that there is only one pair of stones to each waterwheel, and a multiplicity of wheels.

If higher power is required a larger central hub with a greater number of blades is used, the length of the blades remaining more or less constant. This power is matched to the water supply available, and the purpose to which the mill is to be put. Stones used for grinding maize require a greater power input to operate at 120 rpm than do wheat stones at 150 rpm.

CONSTRUCTIONAL DETAILS

(Note: the suffixes refer to key numbers in Figures 1, 2 and 3)

Dams (1)

If a dam is required, it is generally formed of a line of boulders across the river bed to divert part of the flow of the river. Frequently, however, sufficient water can be diverted into the leat without one, and not infrequently the tail-race of one will form the intake to the next.

During the monsoon season flash floods frequently destroy the rudimentary dams, but they can be rapidly re-built when the water level drops again. In some cases the river bed forms a jeep track up the valley or nullah, and the dam may have to be repaired after the passage of vehicles.

Leats (2)

The leats are usually embanked with stone and earth rubble and they cling to the steep faces of the hillsides. They are puddled with suitable fine earth, but leak profusely, though this is not a major problem where water is plentiful. On occasions they have to be carried on timber supporting beams across bare rock faces.

A typical nullah or valley might have a gradient of between 1 in 12 and 1 in 20; major rivers are rather flatter. To obtain a head of 17 or 20 ft a leat of perhaps 300 yds or more in length is required, itself having a considerable gradient to assist water flow. Such is the frequency of mills in some valleys that it is quite common to see two leats one above the other up the hillside, or even at three levels, serving a succession of mills.

SLUICES (3)

At the end of each leat there is one sluice for each waterwheel served, plus

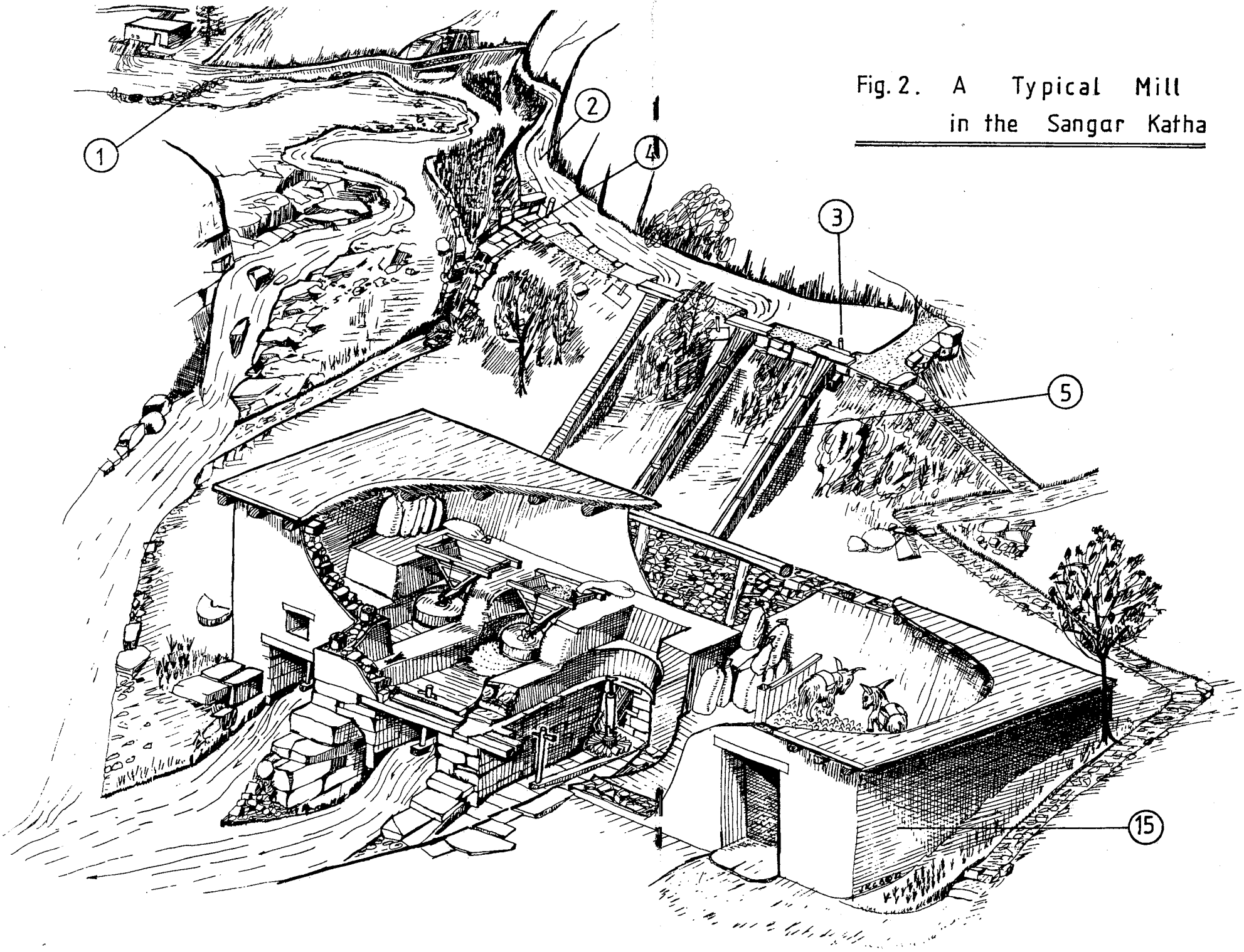

Fig. 2. A Typical Mill in the Sangar Katha

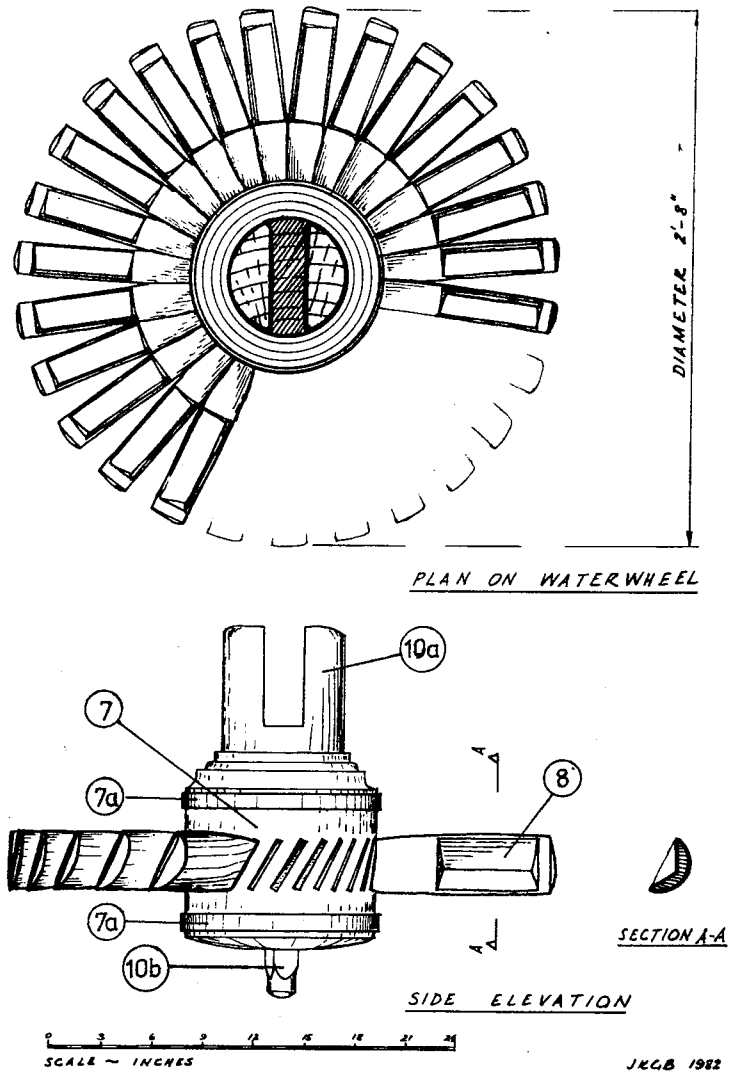

Fig.3. Detail of Waterwheel

one for diverting surplus water. When the mills are stopped the water is always allowed to continue flowing but is run to waste. Stopping the flow entirely would cause the water level to rise and the leat would rapidly be overtopped.

The sluices themselves are rudimentary paddle boards, typically 18 in wide and 12 in deep, which can be dropped into slots in the stone walls of the leat. If a mill is stopped for a long time, for instance for repairs, the sluice must be puddled with fine material to reduce leakage.

The bywash channel (4), if it can be called that, is usually a steep, and sometimes vertical, cascade from the side of the leat. It is pitched with large boulders to prevent erosion.

Flumes (5)

The flume is made from wooden planks, pitsawn and about 1in thick, and is a deep U-shaped channel which may or may not be covered on top. It is frequently funnel shaped at the upper end, changing to a parallel section perhaps one quarter of the way down. A typical flume is cut off square and discharges slightly above the wheel. No form of nozzle, adjustable or otherwise, appears to be used.

The waterwheel (6)

The horizontal wheel consists of a turned wooden hub (7) fitted with a number of wooden blades (8). The diameter of the hub is chosen to suit the duty required, the one shown in Figure 3 having a diameter of 11 in and fitted with 27 blades. A single line of carefully spaced mortices set at about 20° to the vertical are provided to take the blades, and iron hoops (7a) fitted either side to prevent the hub from splitting.

The blades (8) are half round in section, with a flat or dished face set at about 20° to the vertical. Water falling from the chute strikes the faces of the blades obliquely and is thrown both downwards and outwards as the wheel revolves. The torque of the wheel can be increased by using a larger hub to increase the diameter of the wheel. Working speeds were observed in the range 120 to 160 rpm.

The wheels are assembled in dry conditions, the blades fitting tightly in the mortices with a minimum of driving. The wheel is then soaked in water and kept constantly wet thereafter so that the wood swells and a very tight joint is obtained. No pinning is required, although a few wheels were seen with wedges added and wire bands fastened around the extremities of the blades where they had presumably worked loose after use. Access for installation and repair is gained by removing the millstones and the boards forming the stone floor (9), permitting the assembly to be lowered or raised from inside the mill.

The overall length of the stone spindle (10) is selected to suit the relative levels of each mill, but might typically be about 5 ft from the wooden pintle at the base to the iron tee head supporting the runner stone. It is constructed in three distinct sections.

(i) Bottom (hub) section (10a), forming an upward extension of the hub, finishing with a large open ended mortice at the top. A wooden piece about 2 in square (10b) is morticed in to the bottom of the hub, and is shaped to round at its bottom extremity to form the pintle of the bearing.

(ii) mid-section, made of wood roughly worked to a diameter of about 6 in. The lower end is a large tenon which locates in the mortice of the bottom section, and is held to line and level with a large number of wedges. The overall length of the stone spindle can be increased by wedging apart at this joint.

(iii) top section of iron, let into the top end of the middle (wooden) section. This iron spindle is fitted with a tee head, forming the quant, upon which the runner stone sits.

Bridging tree (11)

The 'bridging' or 'sole' tree supports the stone spindle which rests directly on it forming a wood on wood bearing. It was very difficult to examine this detail,

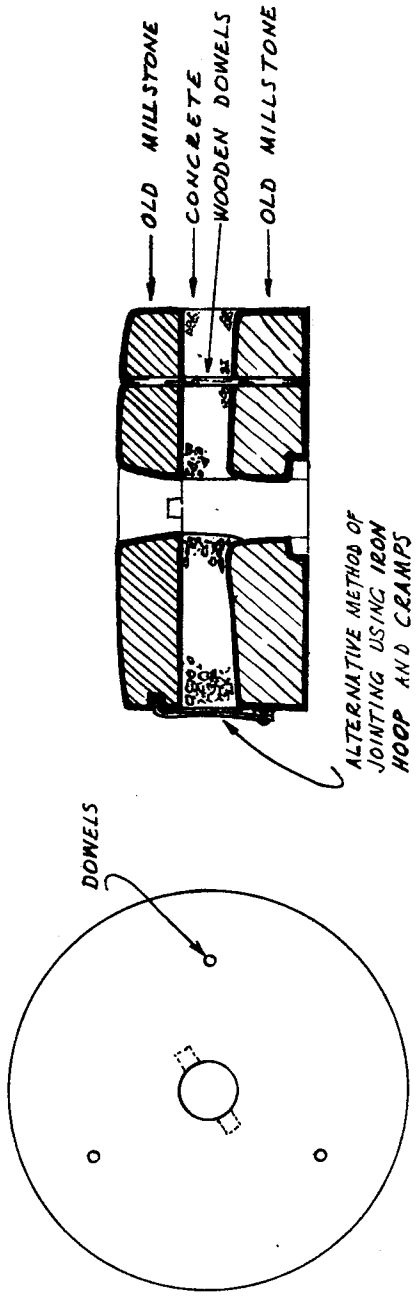

Fig.4. BUILT-UP RUNNER STONE

but as far as I could ascertain from questioning the millers no iron or brass is used at this point.

The rear end of the bridging tree sits on a stone fulcrum. The outer end is suspended from above by means of a wooden pole (or 'lightening tree') (12). Tentering is achieved by driving a wedge into a slot in the top of the lightening tree. It is driven in to raise the runner stone and out to lower it.

On the only occasion I actually saw it adjusted while the mill was running, however, the miller used a wooden pinch bar to lever up the lightening tree and take the weight off the wedge. Adjustment was made by sliding a conveniently sized stone along under the wedge until the desired height was achieved.

The mill stones (13)

The diameter of the stones is fairly standard at about 2ft 10in, but the thickness varies considerably up to a maximum of about 1ft 4in in new stones. A number of local rocks are used, but the best stones are a garnet schist from the Kaghan Valley (see Appendix B). Sandstone from Dera Ismail Khan, west of the Indus river is recommended but expensive because of distance; gritstone was previously brought in from Rajasthan, now in India, but this supply has not been available since partition.

New stones being brought from the quarries are wrapped in old motor lorry tyres, and delivered to the nearest road access to the mill (which might be many miles away). They are then rolled, with the aid of a pole through the eye of the stone, down the mountain tracks to the mill.

Only one of the many spare millstones I saw had any form of worked dressing, and this only very faintly of a sickle form. The stones are however dressed flat with a fairly conventional mill bill; one miller who demonstrated its use to me appeared to work over the stone in a fairly random manner removing high spots.

Dressed stones are, however, not unknown in Pakistan and small composition stones for sale in Lahore intended for hand or engine driven mills had both sickle and tangential dressings. The result of using undressed stones is to produce a very fine flour. The stones get quite hot in the process, especially as they run day and night for considerable periods, and in consequence the mills are warm inside even in the winter. One such mill which appeared deserted from the outside seemed to serve as the village meeting place for when I entered there were no less than 15 men inside. I was unable to determine how many were millers, customers or just casual visitors!

The bed stone sits on a floor of loose boards (9) bridging the wheel and tail-race. There is no vat as such around the stones, but the rear is formed with a semi-circular mud plastered wall, while the flour flies out at the front into a heap on the boards. The boards are kept scrupulously clean, and are never walked on. The flour is swept up at frequent intervals by the miller and shovelled into hessian sacks.

When the millstones wear too thin, having insufficient weight to be of further direct use, they are given a new lease of life by joining two together, with a sandwiched layer of cement concrete in between. To provide additional strength, three holes are bored at 120° at about 2/3 radius, and stout wooden dowels (about $1\frac{1}{4}$ in diameter) are driven through. (Alternatively, a metal banding can be used). The 'new' heavy stone is then returned to use as a runner. Figure 4 shows such a stone.

The mill feed hopper (14)

The semi-circular wall to the rear of the stones is extended upwards and supports the feed hoppers. These are ususally plank sided, of about $1\frac{1}{2}$ sack capacity, but sometimes hoppers dug out of solid tree trunks are to be found, shaped at the ends to sit on the flank walls. One such is shown in Figure 1.

The grain is discharged through a spout of about 2in diameter into a shoe (14a) which feeds into the eye of the runner stone. Vibration is imparted into the shoe by means of a small arm which loosely dangles from the side of the shoe and rubs on the top of the stone. The rate of feed is controlled by a string supporting the end of the shoe from a turnbuckle on the face of the hopper. The hand process of preparing the grain gives an extremely clean product, and very clean flour results.

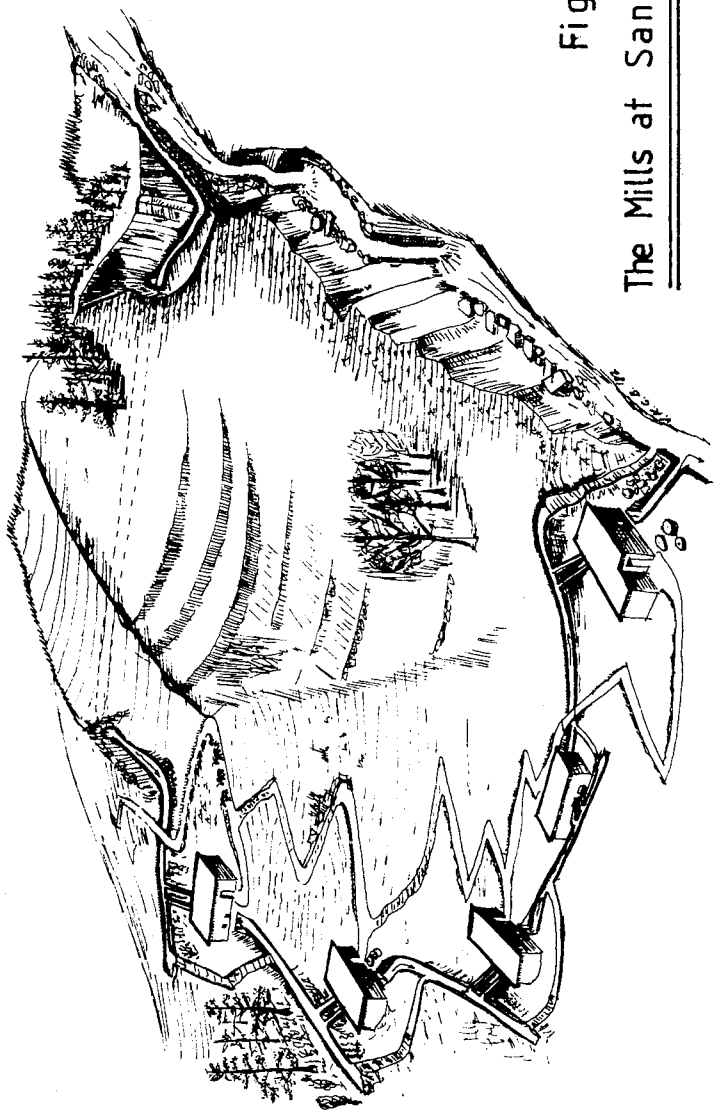

Fig. 5. The Mills at Sania

The buildings (15)

The mill buildings are at first sight indistinguishable from ordinary houses. Traditional construction has evolved a simple design which will withstand heat, monsoon, snow and earthquakes; and if it is damaged it can easily be repaired from local resources.

A framework of hardwood posts, beams and joists, sometimes of great antiquity, supports a flat roof of wattle overlain with sunbaked mud. The walls have infill panels of stones set in mud mortar and plastered with mud reinforced with straw. The only light comes in through the single doorway, although there is a small spy hole overlooking each tailrace to enable the miller to check the water flow. The backs of the mills and houses are frequently built into the hillside to give them additional stability and protection from avalanches, and to reduce the effect of extremes of temperature. It is not uncommon to find mountain paths passing across the roofs of houses; they are strong enough to support large animals and the level surfaces are sometimes used for spreading out wheat to be trampled by oxen in the first stages of grain extraction.

The wheel pits (16) are invariably constructed from large size roughly dressed stone, laid to resist erosion and afford a free flow of water away from the wheel. The mill building is normally used just to house the stones; occasionally, however, either domestic quarters or stables are added.

THE MILLS AT SANIA (Figure 5)

I was introduced to a remarkable group of mills, well off the beaten track, by a colleague, whose grandfather, Haji Kasam Dad Khan, had completed them in 1933. Use is made of a series of rapids in a small river to gain a great fall. From the top of the rapids water is led off in a leat, which passes through a solid rock tunnel over 4 furlongs long. The tunnel had been driven just large enough to walk through, using primitive techniques and equipment; unfortunately Haji Khan had lost an eye in a premature explosion of black blasting powder.

Emerging in the next valley, the leat feeds a series of five double mills (originally there were six), one of which was given to the landowner in payment for the land upon which they were built. From the last mill, the tailrace returns to the original river at the bottom of the rapids. The total fall is about 140 ft.

MILL OWNERSHIP

The majority of the mills are owned by local landowners, or 'Khans'. The income of the mill is split into three equal shares, the first going to the owner, the second to the miller and the third to the 'blacksmith'.

Payment is usually made in kind, with 1/20 of the grain being retained by the mill. This is measured volumetrically, and a suitably sized old tin can be used as a scoop from each sack. In the Harno Nullah a better system was incorporated into the design of the feed hopper which had a second compartment of the appropriate volume so that when the hopper was struck level the correct proportion was retained. This is shown in the hopper illustrated in Figure 1.

MILL CONSTRUCTION AND MAINTENANCE

Construction and maintenance of the mill is undertaken by a 'blacksmith' or a 'carpenter'. The profession of millwright does not seem to be recognised and there does not appear to be an equivalent in Urdu. The cost new of a mill (building, and machine with stones) is currently 15,000 rupees (£750), water supply is extra. New millstones cost 1,000 rupees each (£50), plus transport. For comparison, an unskilled labourer's government wage in the area is about 22 rupees (£1.10) per day.

FUTURE DEVELOPMENTS

Research is proceeding at the University of Katmandu in nearby Nepal into the adaptation of the traditional horizontal mill to drive small electricity generating sets. They are recorded by Needham as performing this function in China in 1958, and no doubt they have been similarly used elsewhere. They utilise well understood local water technology, and are cheaper than the alternative imported small hydro plants using steel penstocks and modern pelton wheels or low head turbines, which

are, however, also used in parts of the region.

On the plains of the Punjab the animal gin corn mills are being threatened by oil engine or electrically driven mills, but in the mountainous areas away from power lines or roads the situation is different. The naturally conservative outlook of the people, and a reluctance to change established practices, fortunately remove the risk of change for changes sake which is so prevalent in the third world. The horizontal mills are well suited to the local situation, and their continued use in quantity thus seems secure for many years to come. Perhaps with more publicity they might even become popular with tourists!

REFERENCES

Watermills with Horizontal Wheels: Paul N. Wilson, Society for the Protection of Ancient Buildings 1960

Science and Civilisation in China: Vol 4 Part 2, Mechanical Engineering, Joseph Needham, Cambridge University Press 1965.

APPENDICES

A. Geological description of Garnet Schist

B. Water quantity and power.

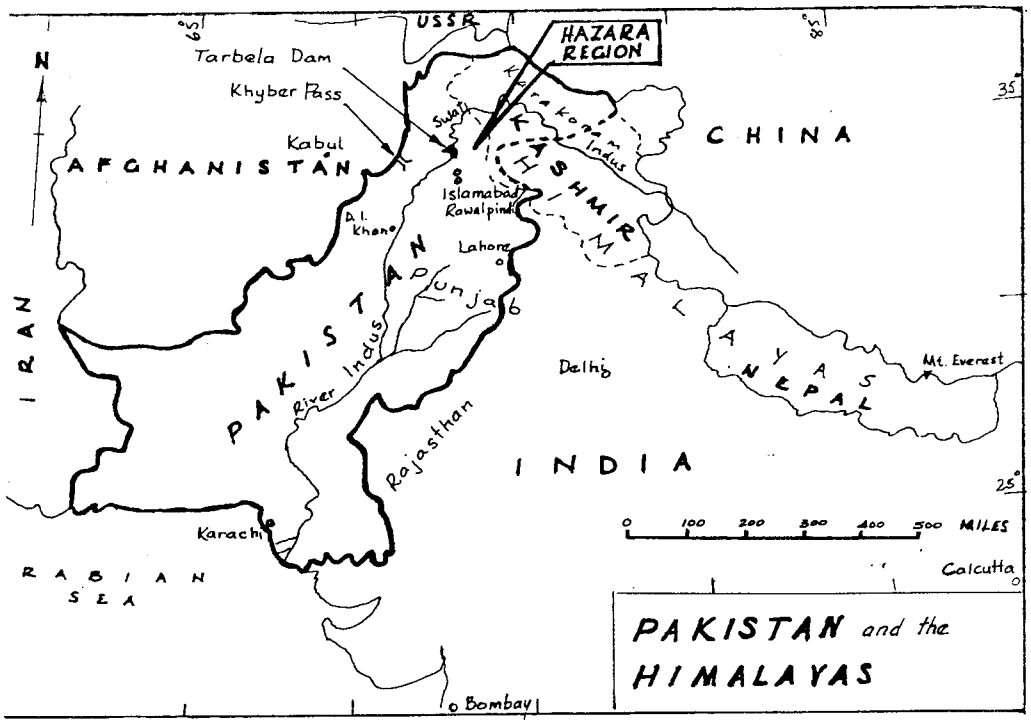

PAKISTAN and the HIMALAYAS

APPENDIX 'A'

GEOLOGICAL DESCRIPTION OF GARNET SCHIST MILLSTONES KINDLY CONTRIBUTED BY M NISAR, GEOLOGIST

GEOLOGICAL NAME

1. The rock is a Garnet Bearing Calcareous Schist associated with the Schistose group.

ORIGIN

2. Garnet bearing calcareous schist is a metamorphic rock associated with non-garnet bearing calcareous schists as one of the units of the schistose group.

3. Acidic igneous intrusions are commonly intruded into the schistose group and the garnet mineralisation in the calcareous schists is thought to be due to contact metamorphism associated with these intrusions. At the contact with the igneous intrusions the rocks are of low schistosity and have more garnet mineralisation. However, fine grained muscovite and the parallel alignment of other flaky minerals in the rock defines a schistosity.

PETROLOGY

4. In hand specimens, the rocks show a schistosity and can be seen to contain calcite, biotite, muscovite and well developed garnet crystals along with patches of eye mineral. The rock weathers to an earthy yellowish or grey colour.

PETROGRAPHY

5. Calcite makes up 35-50% of the rock. It is subhedral to euhedral. Fine grained muscovite is a common constituent of these rocks and occurs as rounded to sub-rounded grains.

OCCURRENCE

6. In NWFP garnet bearing calcareous schist is the only source for mill stones. The following are two of the best known millstone quarries:-

(i) Telegram quarry - district Swat. The rocks are of low schistosity and contain rounded garnets. The millstones made here are used throughout the Swat district.

(ii) Balakot quarry - village Balakot, District Mansehra - this quarry provides millstones throughout the Hazara division especially Abbottabad, Mansehra and the surrounding areas.

PRICES

8. It costs about 1,000 rupees for one millstone from Balakot Quarry.

APPENDIX 'B'

WATER QUANTITY AND POWER

1. The water flow to a typical mill was recorded as follows:-

Leat 2ft 6in wide
8in deep

Average water velocity = 3.71 feet per second

Flow q = 5.9 cubic feet per second (cu sec)

Nett q at intake estimated to be 5.3 cu sec.

Head above wheel = 18 feet

Potential power input = 11hp.

2. More research is required to determine losses, but assuming a mill of 2ft 8in diameter would require a power input of about 1½ hp, there would appear to be a water power loss of over 80%. Most of this is probably lost in the sloping chute, and it would be interesting to make an efficiency comparison with horizontal mills elsewhere which utilise lower heads but incorporate much wider chutes.

THE DEVELOPMENT OF THE WATER TURBINE

by J.A. CRABTREE

The history of water turbines, like the history of Man, has no sharp beginning but evolved over several centuries.

It does not appear to have been covered in any one book, but Lord Wilson's two papers to the Newcomen Society on the British contribution also contain considerable information on early work elsewhere. An article by E.T.Layton, published by the (American) Society for the History of Technology in 1979 gives an account of some of the earlier American work before Francis, as well as the developments in the second half of the 19th century with which he is mainly concerned.

The original form of watermill, dating from Roman times, had flat paddles on a vertical wooden shaft, driven by the impact of water from an inclined chute. This has remained in use in some places until the present century, although more sophisticated designs developed from it have been in use since before the Reformation.

A good form of all-wood wheel had been established in southern Europe before 1500, since it is shown in the drawings of Leonardo da Vinci not as a novelty but as a standard source of power for machines claimed to be novel. The construction was similar to examples made in Spain and Portugal in the last few years. The shaft is morticed like a cart wheel hub, and wooden vanes with a tenon end are driven in. An equal number of vanes with no tenon are fitted between the first set, usually retained by nailing through iron rings on the upper and lower faces of the wheel. The vanes were carved to a spoon shape to give suitable entrance and exit angles for the water.

The wheels are driven by a downward sloping jet of water issuing from a wooden tube set in a stone wall. They are what we now call an impulse turbine, one where all the energy of the water is released in the jet, the wheel recovering this energy so far as possible. There is no change of pressure across the wheel, and they are useless if backwatered because of the drag on the inactive vanes.

Some modern wood wheels in Portugal have an enlarged end to the vanes, forming a complete ring which can be bound by a tyre like a cart wheel. (See Fig. 1) This is probably a 19th century improvement. The step bearing is usually stone on stone.

Because of the difficulties of making a strong wheel in wood, the power of these wheels was very limited, usually under 1 hp. They would require considerable skill to make and repair, while the working life could not have been much over 20 years. This caused such frustration that in Spain runners were even carved in granite. A Spanish member of the Newcomen Society has preserved two examples in his garden. They are nearly as heavy as millstones, being about 8in thick with a continuous rim 3in radially, the vanes about 1½in thick at 8in pitch.

For low falls and backwater situations (including tide mills) a different design was necessary.

The wheel was installed in a close fitting stone well, sometimes enlarged below the wheel for free clearance of waste water. Admission of water was through a tangential port just above the wheel.

In operation the well would be part filled with swirling water and there would be a considerable pressure difference between upper and lower sides of the wheel. In modern terms it would be a reaction turbine without guide vanes. Since the runner was active all the way round it would operate when backwatered. However, if water was short and the tailwater was low, it could also operate as an impulse turbine

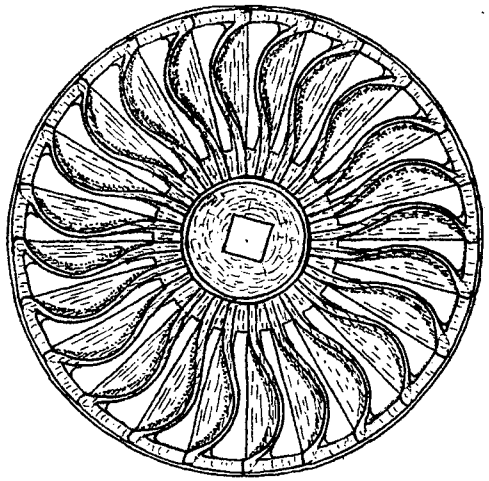

Fig. 1. All-wood construction of impulse wheel.

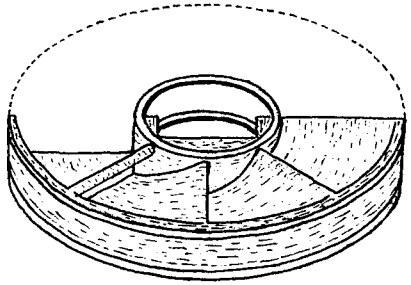

Fig. 2. Wooden reaction wheel for use in a well or tub.

at low power.

Often the wheels were similar in design to the impulse wheels, though with fewer vanes. Sometimes a whole runner was carved from one piece of wood; a sort of multi-bladed propeller with a rim joining the ends of the blades. (See Fig. 2) Because the load was shared right round the wheel, a much higher power would seem possible, perhaps 3 or 4 hp.

A number of these wheels, one for each pair of stones, was installed at a mill near Toulouse, described by Belidor about 1750.

A simplified form of these wheels reached America, possibly via Sweden. The stone well was replaced by wood staves about 3in thick and the device was known as a tub wheel. The wheel itself was often very crude, having only 6 flat paddles bolted to the flats of a hexagonal shaft. Sometimes another piece of wood was fixed to the lower edge to improve the discharge angle. In the better examples the tub extended up the shaft several feet above the wheel.

In 1742 in England Dr. Robert Barker FRS invented his 'Barker's Mill'; originally a vertical stand-pipe with open top and side arms at the base, closed at their ends but with a tangential jet hole in each. The assembly was arranged to rotate as a whole, with water poured into the top. It worked well as a model but there was little or no use of it in full size. The heavy load on the step bearing was a disadvantage, while the centrifugal effect on the water carried round with the arms added to the jet velocity, so that if the device lost its load, the runaway speed was very high.

A useful improvement to Barker's Mill was described in a French publication in 1775, giving credit to M. l'Abbé Pupil. He eliminated the stand-pipe and supplied the moving arms from below through a revolving seal (probably a tapered spigot like a valve seating). This reduced the revolving weight and caused the pressure in the supply to lift some of the remaining weight off the thrust bearing. However, it does not appear that many such machines were built; the one described was only about $\frac{1}{4}$hp, used to drive a fan.

About 1760 the Swiss mathematician Leonhard Euler was consulted about water power. He criticised impulse wheels with flat paddles for their inefficiency and appeared to assume that no improvement was possible. He concentrated on the reaction principle and was probably the first to point out that in an ideal turbine the water would enter the wheel without shock and leave without velocity. (See Fig.3) He did a lot of theoretical work on the effect of centrifugal force. His son later took an interest in the subject but the design which emerged was of no practical use. It was in effect an improved Barker's Mill, in the form of a double walled bell with a water space between the walls. This was filled by a basin at the crown, with vanes in the water space to keep the water moving radially to minimise the centrifugal effect, and emitting the water tangentially at the mouth of the bell. It was of course heavy, difficult and expensive to make and because the head was limited to the height of the bell, very restricted in power.

A simplified cylindrical version, proposed in France by Bouda, retained most of the disadvantages.

The appearance of turbines as we now understand them, made entirely of metal, happened in about 1830 as a result of two things; the need for large powers to drive the big textile mills, and the availability of cheap cast iron.

Above about 30 hp waterwheels become very large and expensive. They are badly affected by tailwater and by ice, and are difficult to govern. The 70ft, 190 hp wheel erected at Greenock in 1840 was said to have cost some £5000; Whitelaw was prepared to supply a turbine for £700 and of course to occupy a much smaller building.

Before 1700 iron castings were made only in heavy sections and simple forms. There were no foundries; castings were made direct from the blast furnaces, which were operated to produce iron for the forges. This was their main trade, and forge iron will not make thin or complex castings.

By 1745 cast iron pipe was available from a number of suppliers in England and no doubt elsewhere, but was still considered very expensive. The London Bridge Waterworks Co. had 33 miles of mains including 1 mile iron and $\frac{1}{2}$ mile lead. All the rest was wood, which despite much leakage and the need to replace the whole system every 20 years was still considered cheaper than iron. Machinery was still

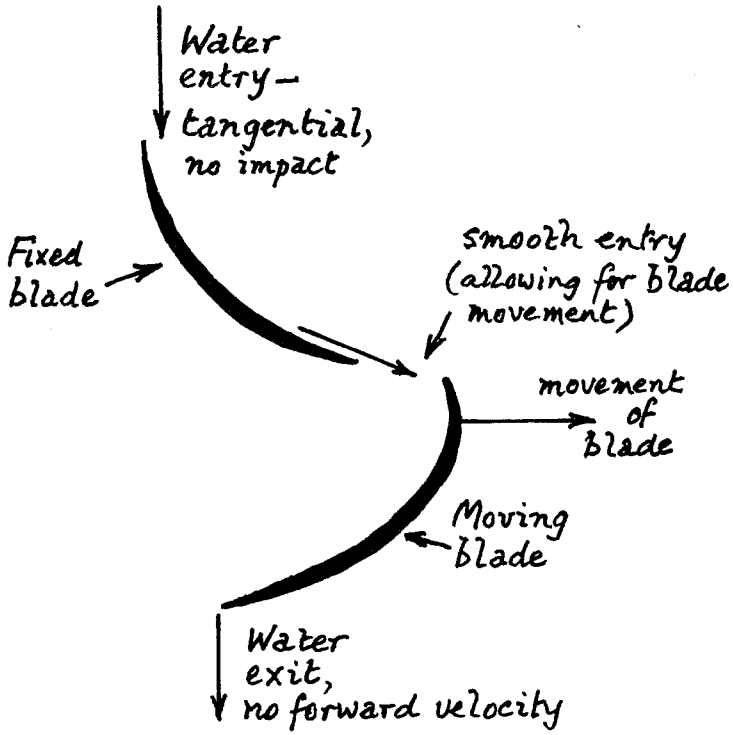

The reaction turbine : Euler's principle

Fig. 3. The Reaction Turbine, Euler's principle. It applies to inward, outward or axial flow, though his proposed design was mainly axial flow. He does not appear to have considered the use of a number of fixed blades.

built to a large extent in wood, only the working parts being iron.

Eventually the spread of coke smelting reversed this situation; by 1820 a machine seldom included any wooden parts. Iron foundries existed in most developed countries.

Of course good castings in brass and bronze had been available for centuries. However they were normally disregarded for major parts of machinery because of cost. The use of brass cylinders for Newcomen engines between 1712 and 1720 is the only well-known exception.

A number of iron foundries were operating in America by 1820 and one might expect some of the many tub wheels to be fitted with iron runners. Whether or not this happened, by 1825 and possibly a decade earlier, various makers were supplying iron 'reaction wheels'. These had a water entry round the shaft on one side and a set of vanes, commonly 6, to discharge tangentially at the rim. They looked very like a modern centrifugal pump runner. They were often supplied in handed pairs on the same shaft, with a wooden water box, provided by the customer, between them. They were used with the shaft either vertical or horizontal. (See Fig 4)

They appear to constitute the first use in any quantity of turbines with metal runners. The efficiency was probably 40 to 45%, but in 1827 one of the makers, Parker Bros., re-discovered the benefit of a tangential entry to the water box, after which they began to supply a cast water box of spiral form. This increased the efficiency to 65% in tests by the Franklin Institute. By 1833 Parkers were also using the draught tube, whereby without wasting any of the fall a turbine can be installed at a convenient height above tailwater.

British engineers and millwrights seem to have ignored the improvements to vertical shaft waterwheels in southern Europe, except for a single example in Smeaton's Designs of an impulse wheel in 1776. The site conditions, 0.5 cusec at 52ft head precluded an overshot wheel.

Unfortunately, although the available output must have been under 2 hp. Smeaton tried to drive a 4ft 6in stone with a quite excessive gear ratio, the wheel worked at under half its efficient speed.

According to Rees' Cyclopaedia of 1819, that was the cause of its very low efficiency. The idea was not followed up by Smeaton or apparently by anyone else, and the poor performance did nothing to remove the existing prejudice against impulse machines.

In the early 19th century the attention of British engineers was concentrated on steam engines, stimulated in part no doubt by the expiry of Watt's patent.

The first activity on water turbines came in 1833 from James Whitelaw, an established Glasgow engineer. He designed an improvement on Barker's Mill, using water admission from below, but also modifying the arms to an S-shape of tapering section. (See Fig. 5). The form was not greatly different from some of the American reaction wheels, notably that of Calvin Wing (1830) which was shown in Fig. 4, leading to some sharp letters in the Franklin Journal in 1842.

Whitelaw made a great point of the calculated form of the runner to eliminate the centrifugal effect at normal speed. This suggests he may have seen Euler's work. However, his design was much more rational and quite easy to make. He made excessive claims to high efficiency, 75% and sometimes more, but accurate tests in recent years have produced nothing over 60%.

Despite his runner design the runaway speed remained quite high; in this condition water usage would increase. Some control of overspeed was therefore possible by restricting flow into the head tank to an amount only sufficient for normal speed. Overspeed would then be restricted by a drop in the driving head.

For important installations Whitelaw fitted governors to the wheel itself. Spring loaded sector gates could partly close the jets through the effect of attached weights acting as governor balls.

For large powers he introduced in 1854 hydraulic servo cylinders, still on the wheel itself, driven by the power water.

Whether or not the turbine itself was entirely his own idea, he deserves credit for a design which sold in considerable numbers and particularly for his advanced thinking on governors.

The mechanical power situation in 19th century France was quite different from that in Britain. Water power was much more abundant, particularly in the south,

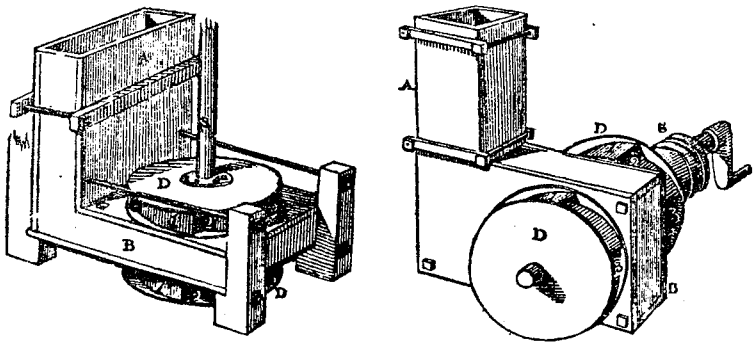

Fig. 4. American reaction wheel. The horizontal form with overhung crank is presumably to drive a frame saw. (From J.Franklin Inst., 11, 1831).

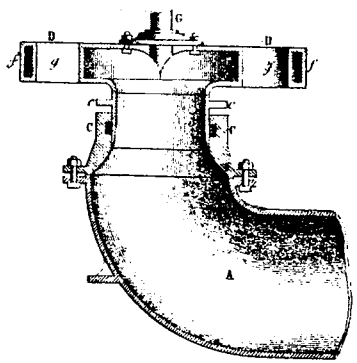

Fig. 5. Whitelaw Turbine. Runner and revolving seal only. (From a contemporary drawing.)

and coal much less accessible. It was logical that a prize should be offered for an improved water power machine. The decision in 1827 to award the prize to Fourneyron seems to be well justified by subsequent events, though it would be interesting to have the detail of the other competitors as we have for Rainhill.

Fourneyron had the example of the existing impulse and reaction wheels, from either of which he could have developed a modern design ideal for the highest or lowest heads respectively. Instead he proposed something quite different from either of them, ideal in the middle range but adaptable to both extremes if necessary.

His specific inventions were; the multiple guide vanes (in place of the tangential port of the tub wheel), radial instead of axial flow, and the cylinder gate to control power, which had no parallel in the prototypes. (See Figs. 6 and 7)

Turbines based on his principle were built in most developed countries until the early years of this century, in sizes up to several thousand horsepower. Besides the publicity due to the prize he had the advantage that the word Turbine, invented at about the same time, was attached to his machine. Perhaps he would have been called the inventor of the turbine even if his claim was false. In fact his claim is very strong.

Visitors to his first turbine at St. Blasier were accustomed to mills driven by waterwheels or beam engines of 40 or 50 hp, in either case being the size of a house. A wheel only a foot diameter doing the same work seemed quite incredible.

It ran at 2,300 rpm which was far beyond current experience of balancing, bearings or gearing and no doubt needed a lot of maintenance. It would now be regarded as a wrong application to such a high head but it suited Fourneyron's purpose admirably. Turbines to his design were soon being made in a number of countries, sometimes with his co-operation, sometimes without his knowledge.

In 1843 Jonval designed a purely axial flow machine which became more popular for low falls than the Fourneyron. (See Fig. 8) It could be smaller and hence presumably cheaper; in an open pit setting there was more possibility of access from above. The virtual elimination of centrifugal effects made speed regulation easier. Since it was impossible to use a cylinder gate it was controlled by shutting off guide vane openings in succession. A good working example remains at Great Alne Mills.

About 1850 Girard modified the Jonval design into a pure impulse machine to obtain better part-load efficiency. It was not a great success since it could not tolerate backwater. Girard also produced an impulse turbine for very high falls, using an outward flow runner and a jet projected at it from the inside. This was a successful design, since at really high falls a Fourneyron runs at an inconveniently high speed and is likely to have a short life. The Girard high head turbine was made in various countries until the expiry of the Pelton patents about 1910.

There were great opportunities for water power in America; until 1865 American industry was using more water power than steam. Originally the abundance of power and small scale of industry enabled the reaction wheels to fill the need quite adequately. Before 1845 there was a need for larger units giving a higher efficiency.

The firm of Boyden in Lowell, Mass., had taken up making the Fourneyron turbine. The town was provided with a power canal supplying a number of industries. By 1845 the available water was nearly all taken up. Efficiency was therefore important to the users and also to the Canal Company. J.B.Francis, their engineer, seems to have been not a great designer but a very capable, accurate and fairminded investigator. An ideal test-house man in fact.

Turbines to be installed on the canal were calibrated for water usage at various gate openings, so that the 'meter readers' on their hourly visits knew what usage to record. Francis used his test flume to refine the process of flow measurement by weirs. His computations were accepted as a standard until well into the present century.

Boyden started building turbines on the Fourneyron principle in 1844 and worked closely with Francis to achieve higher efficiencies. He added a fixed diffuser outside the runner which was said to give an extra 3%, but his very detailed work on the form of the vanes was probably more important but less obvious.

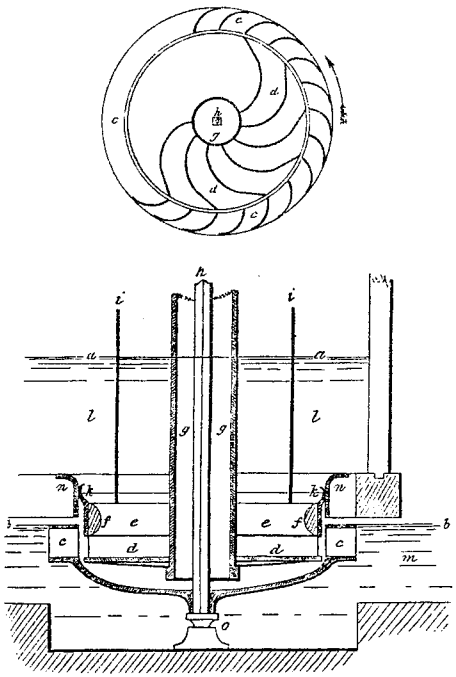

Fig. 6. The Fourneyron outward-flow turbine, from Ellwood Morris, 'Remarks on Reaction Wheels', J.Franklin Inst., 34, 1842.
'a a, the surface of water in the upper level, or forebay; b b, the surface of water in the lower level, or tail race; c c, the wheel with buckets curved in plan; d d, the fixed disk and curved guides; e e, the annular sluice gate with its wooden internal cushions f f; g g, the shaft pipe; h, the shaft upon which the wheel c c is firmly fixed at its lower part; this shaft runs upon a suitable step, or pivot, at o; i i two vertical rods attached to the annular sluice gate at equal distances apart that raise or depress the annular gate with perfect regularity; k k, a leather collar which being pressed outwards by the water, against the concave surface of the concentric fixed cylinder n n, effectively secures this joint in a manner that prevents leakage; l l, the forebay; and finally, m is the tail race through which the water escapes, after having actuated the turbine.'

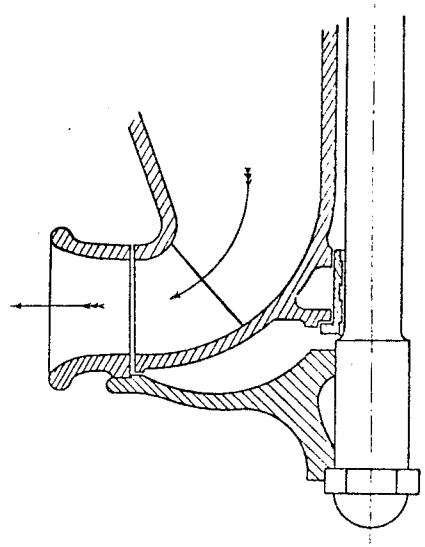

Fig. 7. Fourneyron Turbine. (From J.Orten-Boving, 'Water Turbine Plant', 1910). This shows an improved form with the thrust bearing removed to the top of the shaft, clear of the water. There would normally be a cylinder gate, either in the gap between fixed and moving vanes, or on the outside of the wheel.

Fig. 8. Axial flow Jonval and Girard Turbines. (From J.Orten-Boving).

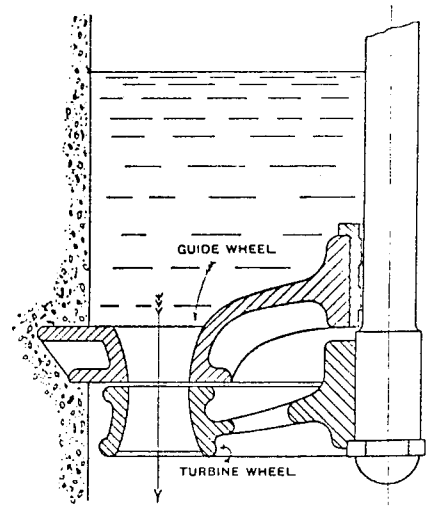

In 1836 Samuel Howd, of northern New York, invented an inward-flow turbine but he was treated like a heretic by all the established turbine experts and could not get a hearing. Eventually Francis took an interest in his idea and proved that all the objections were false. At this stage the turbine had general proportions similar to Fourneyron, still with a cylinder gate. However it would be better suited to open pit settings, and have the better speed characteristic which goes with inward flow. It seems impossible to find an account of how moveable guide vanes reached America, though the British side of the matter is well known.

James Thomson, D. Sc., (elder brother of William, later Lord Kelvin), was Professor of Engineering at Queen's College Belfast in 1847 when he tested 'a model of a new water-wheel'. He was interested in centrifugal pumps as well as turbines, and seems to have been the first person to bring the two subjects together. He used inward flow with only four guide vanes, hinged and linked so that they could open and close in the manner of a venetian blind, and so provide a much more efficient control than was possible with a cylinder gate. (See Fig. 9) For preference he used a runner with control partition and double discharge, especially for horizontal shaft turbines, so eliminating end-thrust. His patent of 1850 includes reference to a suction (draft) tube, apparently first used by Parker but not taken up by other makers. Thomson's runners had long vanes; the outlet diameter being about half the diameter of the rim. Thomson turbines could generate up to 60% of the driving head as centrifugal back pressure. Therefore the runaway speed was very low, and the machine was almost self-governing. This was a great advantage at the time, except possibly on very low heads where a rise in tailwater would make it impossible to reach normal speed, even at a low power.

The Thomson turbine was made under licence by Williamson of Kendal and his successor Gilbert Gilkes & Gordon for over 80 years with little basic change. It was adaptable to a wide range of head, but on very low heads the speed problem could arise and it would probably be much larger and more expensive than a Jonval or some of the later American designs.

Thomson seems not to have had effective patent protection in other countries, since makers elsewhere were soon using inward flow with moveable vanes. The number of vanes was usually increased to 12 or 16, and the idea seems to have reached America in this form.

From 1860 to 1920 a tremendous design effort was put into turbines in America. Another power canal company, at Holyoke, Mass, opened a public test facility which did not close until 1937. Many of the turbine builders established their own test flumes, starting with the Leffel Co. about 1860.

The principle of model tests, applied by Froude to boats, was applied also to turbines, so that a model of perhaps 50 hp made for test purposes could be used to predict with astonishing accuracy the performance of a 5,000 hp power station set.

Acceptance tests on site were greatly improved; electric transmission made it easier to measure output, and a variety of methods were invented to measure flow, notably salt injection.

All this testing helped to break away from two assumptions about inward flow turbines which had unnecessarily restricted earlier designs.

1. High efficiency runners did not need a large number of vanes; better results came from fewer but longer ones.
2. Radial clearance between fixed and moving vanes need not be small; it was increased until it was equal to the runner radius.

Development (as illustrated in Figs. 10, 11 and 12) was first to the typical American mixed flow runner; part inward, part axial. For a given power a runner became much smaller, cheaper and higher in speed. A design outside the main tradition was made in large numbers in America and also by Armfields in England under their name of 'British Empire' turbine. (See Fig. 13) It had a mixed flow runner and no guide vanes at all. There was a spiral case with a flat sluice at the inlet. On a vertical shaft machine the sluice slid horizontally.

They seem to have been intended for medium falls of 15 to 70 feet, preferably installed just above tailwater. If the gate is opened about 30% it will then pass some 50% of maximum flow as a flat jet which will hit the nearest runner vanes and operate as an impulse turbine, provided it is not submerged of course.

In the 1920's Armfields also made a conventional mixed flow turbine with

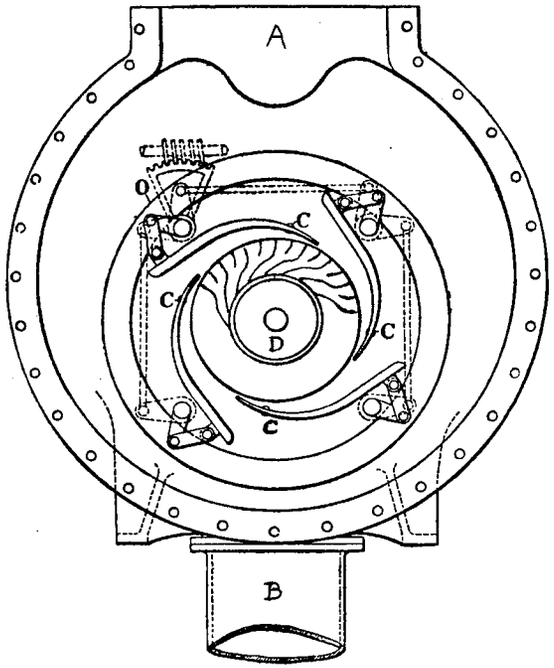

Fig. 9. Thomson Inward Flow Turbine (adapted from Lea's 'Hydraulics', 1906). Water enters the split casing at A, passing between the moveable guide vanes C. It flows inwards through the wheel to the centre opening D and so into the discharge band behind the casing to the draft tube B. The vanes are regulated by links and gearing at O.

Fig. 10. Inward flow Francis Turbine (from J.Orten-Boving). This shows an early stage of development from pure inward flow to mixed flow runner vanes. Unless moving guide vanes were fitted, an actual turbine would have a cylinder gate.

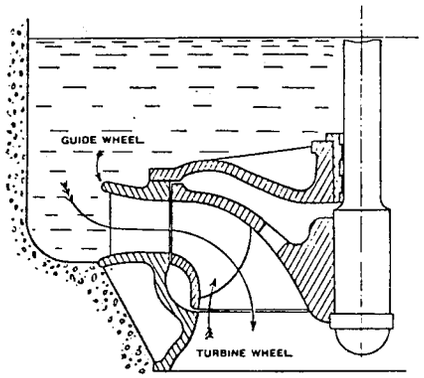

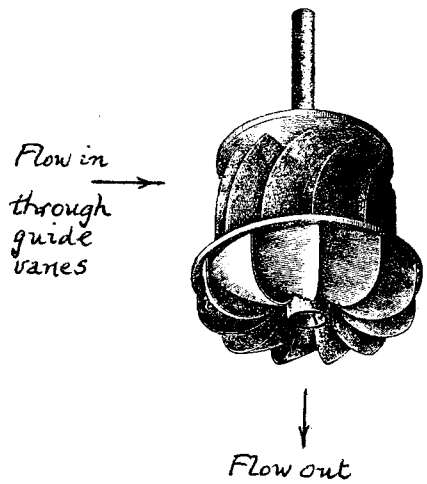

Fig. 11. Victor mixed flow turbine. (Adapted from The Electrcian, 33, 1894.) This design of runner is suitable for fairly low falls and is often installed without a metal outer case as shown in Fig. 12. This is cheaper and much more accessible for maintenance.

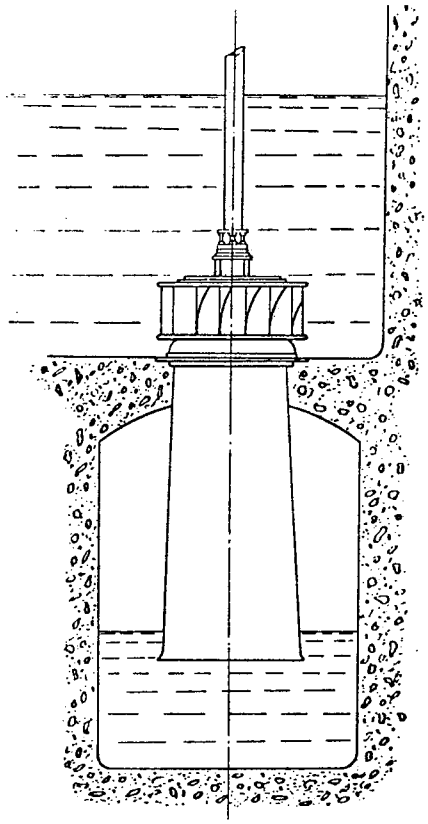

Fig. 12. Reaction turbine setting for low falls (from J.Orten-Boving).

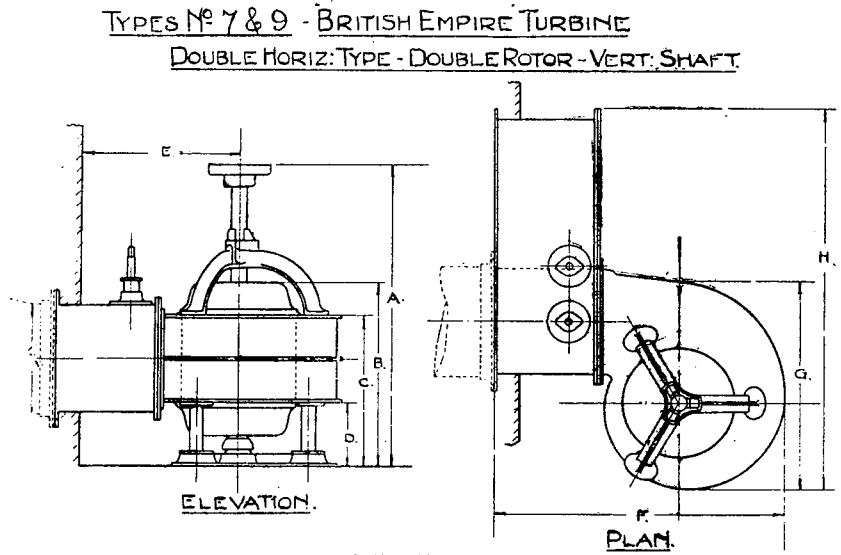

Fig. 13. Armfield's British Empire Turbine. (From Armfield's Catalogue of c.1910.)

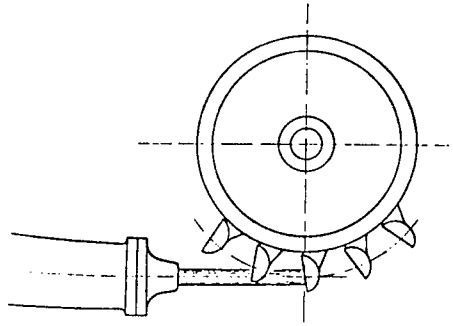

Fig. 14. Pelton Wheel. (From J.Orten-Boving.) A simple cup with central jet throws the waste water in the way of the next cup. Pelton discovered the value of the central division to discharge the waste water to the sides.

cylinder or wicket gates, and did not list British Empire Turbines below 10ft fall, but before 1914 many were installed on falls of 6ft or less, totally immersed in the tailwater. There was then no possibility of impulse operation and they usually had vertical sluices which were cheaper and did not need so large a pit.

Reverting to the mainstream of reaction turbine development, the increase in radial clearance gave higher runner speeds, useful for low heads, and eventually the preferred machine for low heads was a purely axial flow propeller, supplied through a wicket gate exactly as for a mixed flow runner. In this form the efficiency at full load is good, but poor at part load. This was eventually overcome by Kaplan in Austria in 1919. He used a variable pitch propeller, when the pitch is related to the gate opening. The Kaplan Turbine can also be used to obtain normal speed on reduced head (at reduced power of course).

A very recent development by Deriaz, a Swiss designer at English Electric, is the conical variable-pitch propeller. This is an ideal machine for pumped storage, since a pitch change has a similar effect to a speed change for use as a pump.

In the late 19th century American West, gold miners and other metal miners became interested in impulse turbines, (See Fig. 14), originally wheels with simple flat vanes, later changed to spherical cups. In 1880 Lester Pelton, a gold miner turned machine supplier, designed a new cup rather like an elevator bucket but having a central division to split the jet. This raised efficiency from under 50% to about 75%. W.A.Doble, father of Abner Doble the steam car designer, improved the design for the Pelton Co. virtually to the modern double spoon shape in 1889. Doble also introduced the central needle or spear to control the nozzle.

An inward flow reaction runner to give the same power at same head would be about the size of one cup of the Pelton wheel, but on a very high head would run at excessive speed, and if there is the least bit of silt in the water, wear out very quickly. The great advantage of the Pelton wheel over the Girard turbine was that the jet design was not restricted by the space inside the wheel.

Because of its simplicity the Pelton wheel is attractive for small powers even if the head is only 100ft or so. The low speed is then a nuisance. About 1920 Gilkes applied the Pelton jet and speed control to an axial flow runner. This gives the same power and nearly equal efficiency from a wheel half the size at twice the speed. It is still in production under the name of Turgo Turbine.

In 1917 Professor Banki of Budapest published an investigation of a new turbine, first proposed by Michell the Australian thrust bearing designer in 1903 but generally ignored.

It is constructed like a small Poncelet undershot wheel. When the head greatly exceeds the wheel diameter it emerges from the vanes, crosses the empty centre of the wheel, and comes out through the vanes on the other side. (See Fig. 15) A round jet can be about a quarter of the wheel diameter as for the Turgo, giving similar speed. However it is also possible to extend the width of the wheel almost indefinitely, using a flat jet and so getting much more power at the same head with no loss of speed.

There appears to be only one producer of these turbines in quantity, but since the design lends itself to fabricated construction a number of home made turbines have been built. These appear to give about 65% efficiency.

Governing of water turbines is more difficult than for other prime movers because large forces are necessary. Also with a piped supply sudden changes in usage will cause pressure changes opposing the actions of the governor and potentially destructive.

Flour mills will tolerate some speed variation and were usually hand controlled, but textile mills are sensitive to speed changes and even when waterwheel driven often had governors, even in 1820. These were of the clutch or ratchet type, very slow in action (about 1 or 2 minutes for full gate movement). For electricity generation, where load changes can happen miles away without warning, these governors were of limited use. An early installation at Niagara Falls about 1895 used ratchet governing, but soon afterwards a differential governor was used.

There was a row of 5000 hp turbines and a small one whose work was only to drive the governor so its speed was easy to keep constant. It drove a lineshaft the length of the turbine hall. At each main turbine there was a differential

gear, arranged so that the turbine was trying to close its own gate and the lineshaft was trying to open it. Thus each turbine was forced to conform to the lineshaft speed.

Apparently it worked reasonably well in isolation but of course would not operate in parallel with steam stations having ordinary governors with some 4% droop.

Hydraulic servo governors, driven by the power water, had been used by Whitelaw in 1854 and were used later on for Pelton wheels in larger sizes. Even with filtration there was some trouble with the valves. At many reaction turbine plants the power water was too low in pressure, so after 1900 there was a general change to oil pressure systems. These can give full gate travel in 2 seconds if required.

A good governor is complicated and expensive. Below about 20 hp it may cost as much as the turbine. The water it can save at times of low demand is of no value unless it can be stored. Many Pelton and Turgo Turbines have a jet adjusted by hand to suit the supply available, while if the wheel needs less the excess is deflected by a simple direct acting governor.

For small reaction turbines there is increasing interest in governing by keeping a constant load, normally an electrical load.

Perhaps something should be said about home made turbines, since often the cost of a new one kills a promising scheme. The first choice must be a good second hand machine, not too antique and not too large. Owing to low part-load efficiency the output of an over large machine may be virtually zero. The second choice would be an old centrifugal pump. A reasonable efficiency is possible, perhaps 60%, but the usual high speed pump with back-swept vanes is not suitable. Vanes should be nearer to radial. Third, for medium or high falls would be a Banki turbine. Fourth, for low falls, a boat propeller maker might offer something suitable. Fixed guide vanes and a cylinder gate can be fabricated.

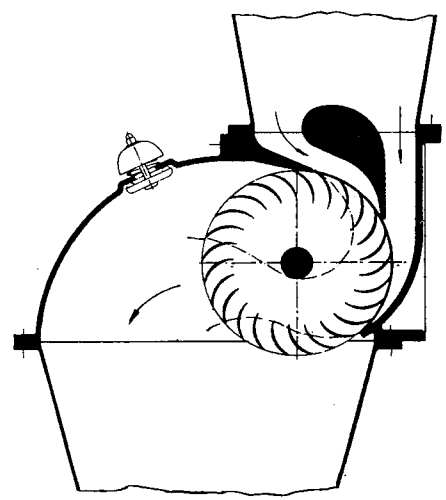

Fig. 15. Cross flow turbine as made by Ossburger, West Germany. (Reproduced with the firm's permission.)

BIBLIOGRAPHY

P.N.Wilson, 'Water Turbines', Science Museum (H.M.S.O.), 1974.
A.H.Gibson, 'Hydraulics', Constable, London, 1908 to 1934.
F.C.Lea, 'Hydraulics', Arnold, London, 1906.
H.Addison, 'Textbook of Applied Hydraulics', Chapman & Hall, London, 1934 to 1941.
A.Jamieson, 'Applied Mechanics', Griffin, London, 1929.
L.C.Hunter, 'A History of Industrial Power in the United States, 1780-1930, Vol. 1, Waterpower in the Century of the Steam Engine', Virginia, 1979.
A.Stowers, 'Observations on the history of water power', Trans. Newcomen Soc., 30, 1957, pp.239-256.
P.N.Wilson, 'Early water turbines in the U.K.', ibid, 31, 1958, pp.219-240.
P.N.Wilson, 'Gilkes's 1853-1975: 122 years of water turbine and pump manufacture'. ibid, 47, 1975, pp.73-84.
E.T.Layton, 'Scientific technology 1845-1900: the hydraulic turbine and the origins of American industrial research', Technology and Culture, 20, 1979, pp.64-89.

JESSE SHIRLEY'S ETRUSCAN BONE AND FLINT MILL ETRURIA, STOKE ON TRENT

by BARRY JOB and TONY GREEN

Known locally as 'Shirley's Bone Works' the firm still grinds products for the pottery industry. It always concentrated on bone, but also produced materials such as flint and Cornish stone, the motive power originally being an early steam engine.

From the mid sixteenth century Burslem and the surrounding areas had been renowned for the manufacture of butter pots and other coarse ware using local clays. In the search to develop finer and whiter wares new materials were discovered and different techniques employed. Clays which produced whiter products were brought from Devon and Cornwall, non plastic materials such as flint and Cornish stone were added to give strength and fusibility. Gradually more raw materials were imported into the area but the manufacturies remained where the skilled labour was located, where coal suitable for kiln firing was mined and clay for saggars was dug; in the 'Potteries'. The chance discovery of the use of ground flint is attributed to John Astbury, a local potter, in 1720. Bone was being introduced into a porcelain body on a manufacturing scale by Josiah Spode before 1800. Only the bones of cattle were found to be suitable; bone china typically consists of 25% china clay, 25% Cornish stone and 50% ground bone, the latter giving the translucent quality. The guiding principles are to grind the constituents very finely, to mix them thoroughly and to exclude foreign matter. The secret with bone and flint is to roast or calcine these hard materials in a kiln before grinding. The processes for these two materials are similar although bone requires less fuel for calcining and must be deglutenated first. Heated to temperatures in excess of 1000°centigrade, water is driven off and the crystalline structure is destroyed to leave a softer more porous material which can be more easily crushed. Following Astbury's discovery, flint was ground dry between millstones or crushed in stamps. These methods were found to be unsuitable, particularly as excessive dust led to silicosis or 'Potter's Rot' and a worker's life expectancy could have been as low as two years. In 1726 a London painter called Thomas Benson patented a method of grinding flint with edge runner stones under water to prevent dust. He developed this to the wet pan grinding method to be seen at Shirley's mill.

From the late eighteenth century the site in Etruria was occupied by Ball's dye works. In 1820 Bourne and Hudson began storing and sorting bone here. The better material was sold to potters and the rest was used for fertilizer. Calcining was carried out but all the grinding was done at Bell's Mill in nearby Cobridge. An agreement was made with Anthony Luke of Saint Austell, Cornwall, making John Bourne the sole agent for his china clay and Cornish stone, this arrangement being continued by the Shirley family. In October 1852 John Bourne died and the works was formally taken over by his son, Jesse Shirley, who had been running the business during his father's lengthy illness.

In 1856 the present range of buildings was erected for Jesse Shirley by George Kirk of Etruria who was well known for his good materials and workmanship. This allowed all of the processes to be carried out at the Etruria site. An advertisement in the Staffordshire Advertiser which circulated in the rural areas proclaims:-

> 'Jesse Shirley begs to inform his agricultural friends that he is now prepared to supply genuine quality bones at the following low prices -

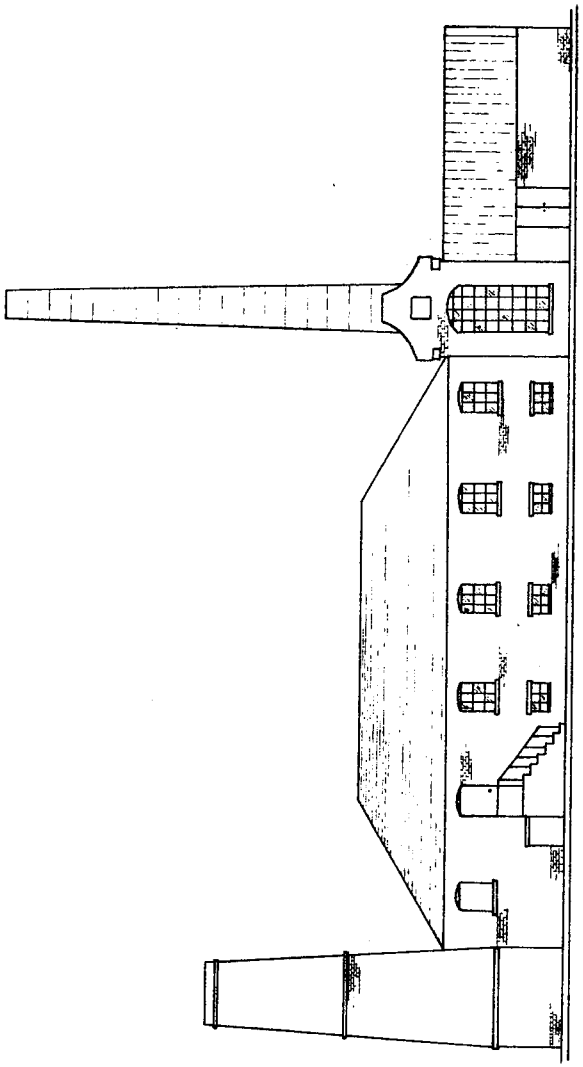

© GAL 1982

Etruscan Bone and Flint Mill
Stoke-on-Trent

Bones ground half inch	£5 15s 0d	per ton
ditto ground fine	£5 17s 6d	per ton
Superphosphate of lime	£7 10s 0d	per ton
Wheat manure	£7 10s 0d	per ton

Prepared bones at any price, from £3 to £8 per ton according to quality required.'

The buildings and machinery were in continuous use and little altered until 1972 when they were in poor condition. Still a family firm, the decision was made to concentrate on the production of ground bone on the remainder of the site leaving most of the original range of buildings intact. The most up-to-date machinery has been installed, whilst the City of Stoke on Trent leases the listed buildings to form part of an industrial canalside museum.

Lying between the Caldon Canal and the Trent and Mersey Canal and directly to the south east of their junction (grid reference SJ 872468) the mill retains its own basin. The buildings were originally at canal level but mining subsidence of at least five feet has resulted in the ground floor now being substantially below the canal. At the north west end of the range of buildings is located the double calcining kiln. Each kiln was fired once per 24 hours. They were recharged with bone during the day to be fired at 4.30 p.m. By 6 a.m. the following morning the kiln was ready to be emptied. It was drawn by hand from the bottom, any oversize material being fed through the crusher. This was belt driven by a small steam engine of unknown make and age. The belt actually passes across the openings to the kilns and considerably restricts access. The bone was loaded into a kibble and raised to the pan grinding floor. The two ton hoist was driven by a friction chain and ratchet from a crownwheel on top of one of the pan shafts necessitating this pan to be run to operate the hoist. Originally there were twelve pans but the end two 7ft. pans were removed during the recent modernisation. Each pan was used for a particular product. The pan base is constructed on a layer of 'Tough Tom' clay to make it watertight. A 'pavement' of chert blocks is built on top, the gaps being filled with pitcher, i.e. broken biscuit ware, (see sketch). The first grinding would also be of a soft material, such as pitcher, to bed in the pavement. The pavement blocks are now unobtainable but they would reputedly last for 80 years before needing to be replaced. About 25 cwt. of bone would be tipped into a pan, water would be added and the sweep arms would push heavy chert runner blocks around the pan for eight hours. This grinds the bone and it would then be channelled to a wash tub to disperse the bone particles and prevent coagulation. The large wash tubs have been included in the modernisation programme although three small ones remain in the shaft room. The washing process was carried out by hand. A vertical wooden gate was turned by four handles. Four men would pass the handles from one man to the next for 20 revolutions, then at the call of 'back' the gate was suddenly braked so that the slurry blunged through the gate. This was repeated three times. The slurry was left for five minutes then run to a 120 holes to the inch sieve. The oversize was returned to the grinding pans, the undersize was channelled to large settling arks. These held 20 to 30 tons of liquid and have also been lost, although two small arks for special products still exist in the shaft room. As the bone settled plugs were removed from a vertical plank to run off the water. The bone could either be sold as a thickened slurry or pumped to drying kilns where the water was evaporated to leave blocks of ground bone.

The pans were underdriven by bevel gears from two massive horizontal shafts which run down each side of the room (see plan). Each shaft pit wheel was driven by a central gear wheel keyed to the flywheel shaft and driven through a very heavy duty ratchet so that the engine could be backed to the starting position without turning the shafts.

The motive power for the mill is a beam engine called 'Princess'. It has a single cylinder of 31 5/8 inches in diameter and 5 feet stroke. The single web cast iron beam was a replacement in 1917 by Dean and Low of Stoke on Trent but would appear to be a replica of the original. A cruciform connecting rod drives an overhung crank, the flywheel being about 20 feet in diameter. The engine was installed by Sherratts of Salford when the buildings were erected in 1856, but it was secondhand then and may date from the turn of the century. Its previous

VERTICAL ELEVATION
DRIVE SHAFT a. GRINDING PAN b.
HOIST c.

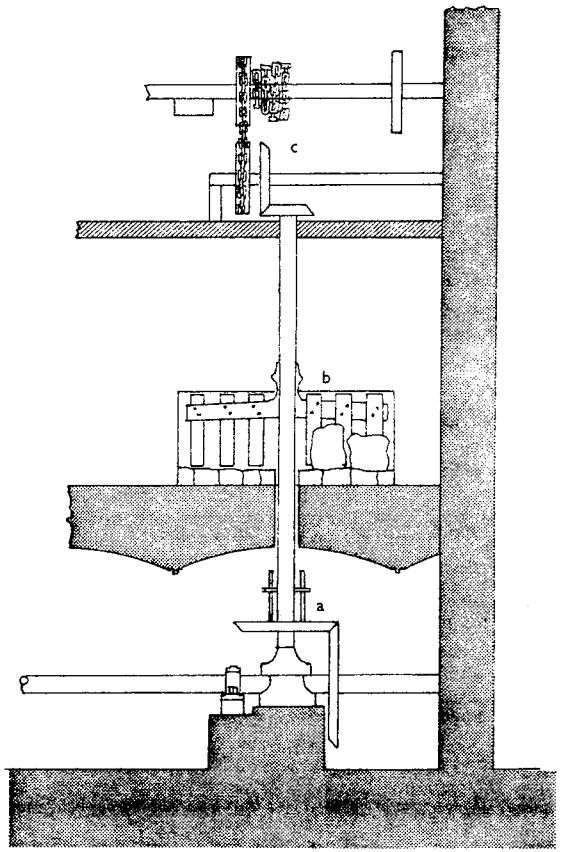

Scale 1:50
© GAL 1982

duty has variously been described as a ship's engine and driving a Lancashire cotton mill. It is controlled by ball governors and can run at 32 rev/min, but usually ran at 28 rev/min, when charging the pans, being reduced to 22 rev/min when grinding. A bell which hung above the engine could be rung from the pan room to inform the engineman of the required operation. A belt pulley on one of the shafts did drive a dynamo to light the works but the speed variation required gas lighting to be maintained as well. Other belts from the vertical shafts were used to power the small wash tubs. Although well maintained during its working life the engine became somewhat neglected during its latter years. Steam leakage became excessive and the noise from badly worn bearings resulted in its operation being likened to a small steam hammer. The original boiler had a maximum steam pressure of 40 lb/in^2 but this was scrapped in 1953 and a Lancashire boiler by John Thompson of Wolverhampton was installed. This was already 13 years old and had a rating of 75 lb/in^2 . It was normally operated at 70 lb/in^2 and the steam was passed through a valve to reduce it to about 35 lb/in^2 before reaching the engine. A brick built tank supplied feed water, condensing water being obtained directly from the canal.

Although road access is poor, nevertheless horses were stabled at the works. A pair of them was used to draw loads up the incline from the mill. Drayman Frost who lived at one of the cottages on the site was often to be seen leading the galloping horses, with Caesar the Great Dane watchdog urging them all on. Transport is now by lorry, consignments of bone coming mainly from South America but also from various African and European countries.

Latterly working two shifts a day from 6 a.m. to 2 p.m., and from 10 p.m. to 6 a.m., six days a week, the mill throughput was about 30 tons of bone per week, using about 18 tons of coal. After ceasing operation the future was for a while uncertain but now the City of Stoke on Trent leases the industrial buildings for a nominal rent. Considerable restoration work has taken place; the buildings have largely been reroofed and glazed and over 60 tons of debris have been removed. Various grants have been received and last year a prize was won from the 'Shell' Inland Waterways Restoration competition. The majority of the work is done by volunteers who meet one evening a week and although steady progress is being made it will still be some considerable time before the engine is again in steam and the mill is open to the public.

ENGINE HOUSE PLAN AND ELEVATION
KEY

A. Steam inlet from boiler
B. Cylinder
C. Vertical boiler feed pump with 'banjo' connecting rod (replaced by later weir pumps).
D. Control valve
E. Main steam valve
F. Hot well
G. Air pump
H. Condensor
K. Steam chest
L. Eccentric link
M. Beam
N. Governor link
P. Governor
Q. Crank
R. Flywheel
S. Condensor cold water feed from canal
T. Shaft to pit wheel
U. Entrance door

GROUND FLOOR AND FIRST FLOOR PLAN
KEY

A. Boiler house
B. Engine house
C. Shaft room
D. Crusher room
E. Kilns
F. Beam floor
G. Pan room

a. Boiler
b. Steam feed to engine
c. Horizontal shafts with bevel gear drive to vertical shafts and pans.
d. Washtubs
e. Arks
f. Pulsometer pump
g. Blunger pump
h. Crusher
k. Steam engine with belt drive to crusher
m. Weir boiler feed pumps
n. Beam
o. Hand winch
p. Crane
r. Pans

ENGINE HOUSE PLAN

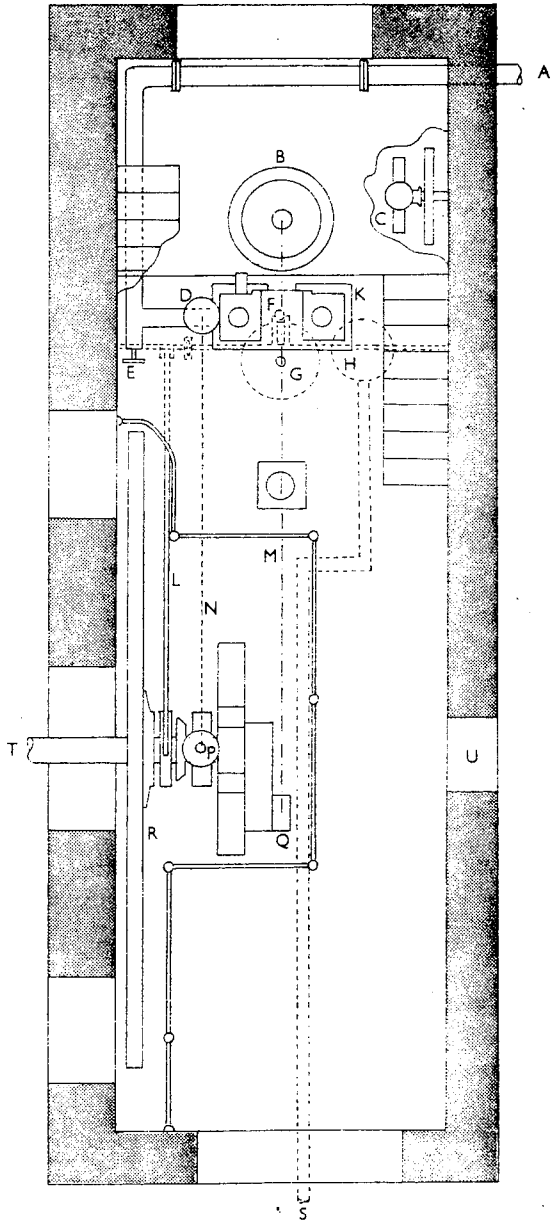

Scale 1:50

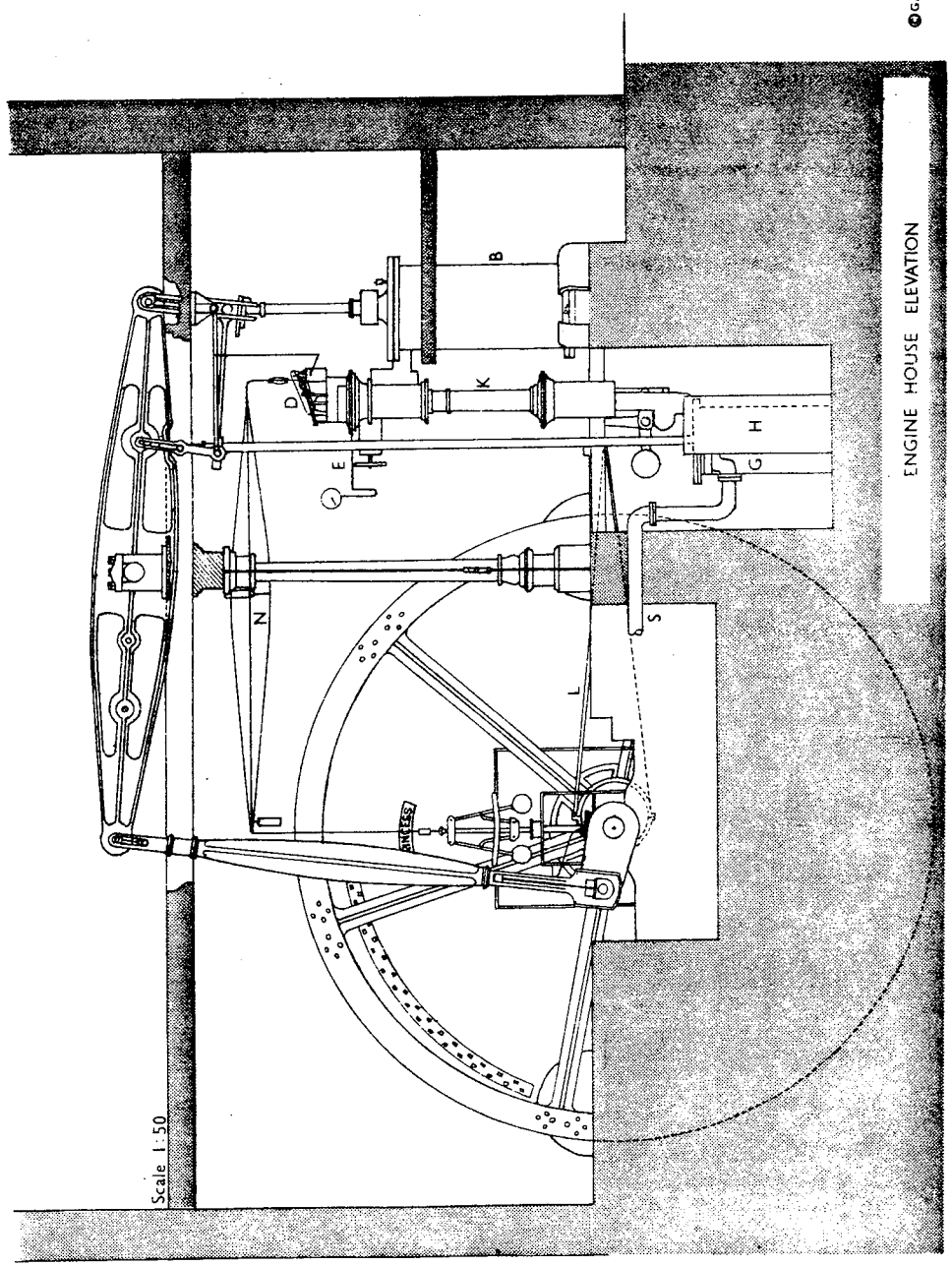

ENGINE HOUSE ELEVATION

Scale 1:50

©GAL 1982

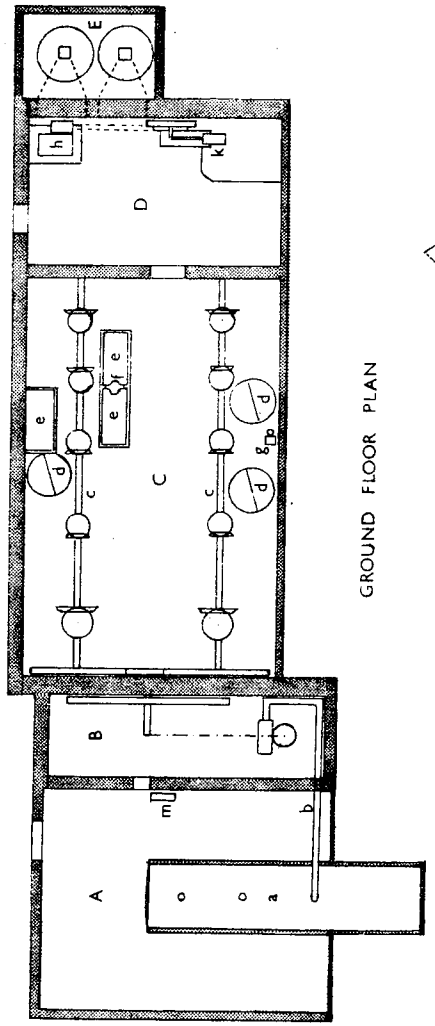

GROUND FLOOR PLAN

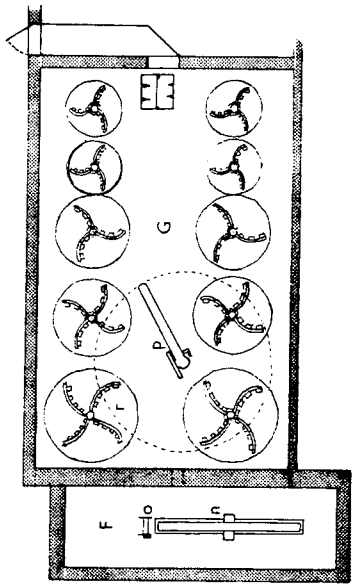

FIRST FLOOR PLAN

© GAL 1982

Midland Wind and Water Mills Group Publications
The following publications are available from Gordon Tucker,
26, Twatling Road, Barnt Green, Birmingham B45 8HT.

Warwickshire Watermills by D.T.N. Booth
Published Oct. 1978. Reprinted June 1979.
95 pages, 25 photographs.
80p. to members, £1.40 to non-members (inc. postage).

Wind and Water Mills No.1 out of print.

Wind and Water Mills No.2
Published June 1981.
48 pages, 18 drawings and maps.
Contents. More Mills on the Belne Brook.
Watermills of the River Salwarpe and its Tributaries. Part 1.
Windmill Governors.
Mills and Forges on the Wannerton Brook in North Worcestershire.
Robert Summers, Millwright of Tanworth-in-Arden and the Reconstruction of Wolverton Mill, Buckinghamshire, 1868-77.
60p. to members, £1.00 to non-members (inc. postage).

Wind and Water Mills No.3
Published June 1982.
48 pages, 15 drawings and maps.
Contents. Watermills of the River Salwarpe and its Tributaries. Part 2.
A History of Norton Lindsey Windmill, Warwickshire.
Drawings of Norton Lindsey Windmill.
Notes on the Structure and Machinery of Norton Lindsey Windmill.
Millstone Making in France: When Epernon Produced Millstones.
French Millstones.
Everton Windmill, Nottinghamshire.
60p. to members, £1.00 to non-members (inc. postage).